TC53e/TC53e-RFID/TC58e

Touch Computer

Product Reference Guide
for Android

ZEBRA

MN-004806-05EN Rev. A

2025/11/07

ZEBRA and the stylized Zebra head are trademarks of Zebra Technologies Corporation, registered in many jurisdictions worldwide. Google, Android, Google Play and other marks are trademarks of Google LLC. All other trademarks are the property of their respective owners. ©2025 Zebra Technologies Corporation and/or its affiliates. All rights reserved.

Information in this document is subject to change without notice. The software described in this document is furnished under a license agreement or nondisclosure agreement. The software may be used or copied only in accordance with the terms of those agreements.

For further information regarding legal and proprietary statements, please go to:

SOFTWARE: zebra.com/informationpolicy.
COPYRIGHTS: zebra.com/copyright.
PATENTS: ip.zebra.com.
WARRANTY: zebra.com/warranty.
END USER LICENSE AGREEMENT: zebra.com/eula.

Terms of Use

Proprietary Statement

This manual contains proprietary information of Zebra Technologies Corporation and its subsidiaries (“Zebra Technologies”). It is intended solely for the information and use of parties operating and maintaining the equipment described herein. Such proprietary information may not be used, reproduced, or disclosed to any other parties for any other purpose without the express, written permission of Zebra Technologies.

Product Improvements

Continuous improvement of products is a policy of Zebra Technologies. All specifications and designs are subject to change without notice.

Liability Disclaimer

Zebra Technologies takes steps to ensure that its published Engineering specifications and manuals are correct; however, errors do occur. Zebra Technologies reserves the right to correct any such errors and disclaims liability resulting therefrom.

Limitation of Liability

In no event shall Zebra Technologies or anyone else involved in the creation, production, or delivery of the accompanying product (including hardware and software) be liable for any damages whatsoever (including, without limitation, consequential damages including loss of business profits, business interruption, or loss of business information) arising out of the use of, the results of use of, or inability to use such product, even if Zebra Technologies has been advised of the possibility of such damages. Some jurisdictions do not allow the exclusion or limitation of incidental or consequential damages, so the above limitation or exclusion may not apply to you.

Contents

About This Guide **13**
Configurations 13
Notational Conventions 17
Icon Conventions 17
Service Information 17
NFC Wayfinding System Disclosure Statement 18
Determining Software Versions 18
Determining the Serial Number 19

Getting Started **20**
Unpacking the Device 20
Features 21
StrongBox Secure Element 24
Setting Up the Device 24
Installing a microSD Card 24
Installing a SIM Card 26
The Rechargeable Li-Ion Wireless Battery 28
Charging the Device 29
Charging the Device by USB Cable 30
Charging Indicators 31
Charging the Spare Battery 32
Spare Battery Charging Indicators 33
Replacing the Battery 33
Replacing the MicroSD Card 35
Replacing the SIM Card 38

Using the Device....42
Home Screen....42
Setting the Home Screen Rotation....43
Status Bar....44
Managing Notifications....48
Opening the Quick Access Panel....49
Editing the Quick Access Tiles....52
Battery Management....52
Checking Battery Status....53
Monitoring Battery Usage....53
Low Battery Notification....53
Turning Off the Radios....53
Interactive Sensor Technology....54
Waking the Device....54
USB Communication....54
Transferring Files....55
Transferring Photos....55
Disconnect from the Host Computer....55

Settings....56
Accessing Settings....56
Display Settings....56
Setting Touch Panel Mode....60
Setting Touch Panel Mode - TC53e and TC53e-RFID....61
Setting Touch Panel Mode - TC58e....61
Setting the Date and Time....62
General Sound Setting....62
Sound Options....63
Zebra Volume Controls....63
Setting Wake-Up Sources....63
Remapping a Button....64
Remappable Keys....64
Alert Button....65
Configure the Alert Button....65

Using an Alert Button....65
Alert Accessibility Service....66
Keyboards....66
Keyboard Configuration....66
Using the Android and Gboard Keyboards....66
Enterprise Keyboard....67
Language Usage....67
Changing the Language Setting....67
Adding Words to the Dictionary....68
Notifications....68
Setting App Notifications....68
Viewing Notifications....68
Controlling Lock Screen Notifications....69
Enabling Blink Light....69

Applications....70
Installed Applications....70
Accessing Apps....71
Switching Between Recent Apps....71
Battery Manager....72
Battery Manager Information Tab....72
Camera....74
Taking Photos....74
Recording Videos....76
Quick Camera Photo and Video Mode Settings....78
Camera and Video Settings....79
DWDemo....80
DWDemo Icons....80
Selecting a Scanner....80
RxLogger....81
RxLogger Configuration....81
Configuration File....81
Enabling Logging....81
Disabling Logging....81

Extracting Log Files....82
Backing Up Data....82
RxLogger Utility....82

Data Capture....84
Imaging....84
Digital Camera....85
Operational Modes....85
Scanning Considerations....86
Scanning with Internal Imager....86
Scanning with Internal Camera....87
Scanning with Integrated RFID....88
Scanning with the RS507/RS507X Hands-Free Imager....90
Scanning with the RS5100 Ring Scanner....92
Scanning with the RS6000 Bluetooth Ring Scanner....93
Scanning with the RS6100 Bluetooth Ring Scanner....96
Scanning with the DS3678 Bluetooth Scanner....98
Scanning with the DS2278 Digital Scanner....99
Scanning with the DS8178 Digital Scanner....100
Scanning with the LI3678 Linear Imager....102
Pairing a Bluetooth Ring Scanner....103
Pairing in SSI Mode Using Near Field Communication....103
Pairing in HID Mode Using Near Field Communication....103
Pairing Using Simple Serial Interface (SSI)....104
Pairing the Ring Scanner Using Bluetooth Human Interface Device....104
Pairing a Bluetooth Scanner....105
Pairing Using Simple Serial Interface (SSI)....105
Pairing Using Bluetooth Human Interface Device....106
DataWedge....107
Enabling DataWedge....107
Disabling DataWedge....107
Supported Decoders....108
Camera Supported Decoders....108
SE55 Internal Imager Supported Decoders....108

SE4720 Internal Imager Supported Decoders....109
SE4770 Internal Imager Supported Decoders....110
RS507/RS507x Supported Decoders....111
RS5100 Supported Decoders....112
RS6000 Supported Decoders....112
DS2278 Supported Decoders....113
DS3678 Supported Decoders....114
DS8178 Supported Decoders....115
LI3678 Supported Decoders....116

Wireless....117
Wireless Wide Area Networks....117
Sharing the Mobile Data Connection....117
Data Usage....119
Cellular Network Settings....120
Wireless Local Area Network....123
Connecting to a Wi-Fi Network....123
Removing a Wi-Fi Network....124
WLAN Configuration....124
Bluetooth....129
Adaptive Frequency Hopping....129
Security....129
Bluetooth Profiles....130
Bluetooth Power States....131
Bluetooth Radio Power....131
Enabling Bluetooth....131
Disabling Bluetooth....131
Discovering Bluetooth Device(s)....132
Changing the Bluetooth Name....132
Connecting to a Bluetooth Device....132
Selecting Profiles on the Bluetooth Device....132
Unpairing a Bluetooth Device....133
Cast....133
Near Field Communication....133

Reading NFC Cards 134
Enterprise NFC Settings 134

Calls 135
Emergency Calling 135
Audio Modes 135
Bluetooth Headset 135
Adjusting Audio Volume 136
Making a Call Using the Dialer 136
Accessing Dialing Options 137
Make a Call Using Contacts 137
Using the Dialer 137
Using the Contacts App 138
Make a Call Using Call History 138
Using the Call History List 138
Making a Conference Call on GSM 138
Making a Call Using a Bluetooth Headset 139
Answering Calls 139
Call Settings 140

Accessories 143
Inserting a TC5X Shim into a Cradle 146
Charging the Device in a Cradle 147
1-Slot Charge Only Cradle 148
1-Slot Charger Only Cradle Setup 149
Charging the Spare Battery with the 1-Slot Charge Only Cradle 149
1-Slot USB/Ethernet Charge Cradle 150
1-Slot USB/Ethernet Charging Cradle Setup 151
Charging the Spare Battery with the 1-Slot Charge Only Cradle 152
Ethernet Settings 152
5-Slot Charge Only Cradle 153
5-Slot Charge Only Cradle Setup 154
Installing the 4-Slot Battery Charger 155

Removing the 4-Slot Battery Charger 159
5-Slot Ethernet Cradle 160
5-Slot Ethernet Cradle Setup 162
Daisy-Chaining Ethernet Cradles 162
Installing the 4-Slot Battery Charger 164
Removing the 4-Slot Battery Charger 167
Ethernet Communication 168
4-Slot Device Charge Only Cradle and Spare Battery Charger 170
5-Slot (4 Device/4 Spare Battery) Charge Only Cradle with Battery Charger Setup 171
4-Slot Battery Charger 171
Single Charger Setup 172
Two Charger Setup 173
Charging Spare Batteries 174
Connect Cradle 175
Inserting a Device into the Connect Cradle 176
Charge/USB-C Cable 176
Power Supply with Plug Adapters 177
Rugged Boot 178
Rugged Boot Installation 178
Rugged Boot Removal 179
Stylus and Tether 180
Stylus and Tether Installation 180
Stylus and Tether with Hand Strap Installation 183
Basic Hand Strap 185
Hand Strap Installation 185
Hand Strap Removal 186
Trigger Handle 187
Inserting the Device into the Trigger Handle 188
Removing the Device from the Trigger Handle 188
Installing the Optional Lanyard 189
Wall Installation 190
5-Slot Cradle Bracket Installation 190
Four 4-Slot Battery Charger Bracket Installation 193

Mounting a Single Bracket to a Wall....196
Rack Mount Installation....198

Application Deployment....202
Secure Certificates....202
Installing a Secure Certificate....202
Configuring Credential Storage Settings....203
Android Development Tools....203
Android Development Workstation....203
Enabling Developer Options....203
EMDK for Android....204
StageNow for Android....204
GMS Restricted....204
ADB USB Setup....204
Application Installation Methods....205
Installing Applications Using the USB Connection....206
Installing Applications Using the Android Debug Bridge....206
Installing Applications Using Wireless ADB....207
Installing Applications Using a microSD Card....210
Uninstalling an Application....211
Android System Update....211
Performing a System Update Using microSD Card....211
Performing a System Update Using ADB....212
Verifying System Update Installation....212
Android Enterprise Reset....212
Performing an Enterprise Reset Using microSD Card....213
Performing an Enterprise Reset Using ADB....213
Android Factory Reset....214
Performing a Factory Reset Using microSD Card....214
Performing a Factory Reset Using ADB....215
Android Storage....215
Random Access Memory....216
Internal Storage....216
External Storage....217

Managing Apps 217
App Details 218
Managing Downloads 218

Maintenance and Troubleshooting 219
Maintaining the Device 219
Display Best Practices 219
Best Practices for Enterprise Mobile Devices Operating in Hot Environments and Direct Sunlight 220
Properly Plugging and Unplugging a USB-C Cable 220
Connecting a USB-C Cable 221
Disconnecting a USB-C Cable 221
Battery Safety Guidelines 222
Cleaning Instructions 222
Approved Cleaning and Disinfectant Agents 223
Cleaning and Disinfecting Guidelines 223
Cleaning Materials Required 223
Cleaning Frequency 224
Special Cleaning Notes 224
Cleaning the Device 224
Housing 224
Display 224
Battery Guide Slots 225
Camera and Exit Window 225
Cleaning the Battery Connector 225
Cleaning Cradle Connectors 226
Troubleshooting 226
Resetting the Device 226
Device Troubleshooting 227
2-Slot Charge Only Cradle Troubleshooting 229
5-Slot Ethernet Cradle Troubleshooting 230
5-Slot Charge Only Cradle Troubleshooting 231
4-Slot Battery Charger Troubleshooting 231

Technical Specifications **233**
SE4720 Decode Distances 233
SE4770 Decode Distances 233
SE55 Decode Distances 234
1-Slot Charge Only Cradle Technical Specifications 234
4-Slot Battery Charger Technical Specifications 235
5-Slot Charge Only Cradle Technical Specifications 236
5-Slot Ethernet Cradle Technical Specifications 236
Connect Cradle Technical Specifications 237
Trigger Handle Technical Specifications 238
Charge/USB Cable Technical Specifications 238

About This Guide

This guide provides information about setting up and using the TC53e, TC53e-RFID, and TC58e touch computers. Some screens shown in this guide may differ from those on the device.

Configurations

This guide covers the following configurations:

NOTE: All configurations run on Android-based, Google™ Mobile Services (GMS).

Table 1 WLAN Configurations

Configuration	Description	Memory	Data Capture Options	Battery
TC530E-0T1E1B1000-NA	LAN: Wi-Fi 6, 16MP RFC, 8MP FFC, WARM SWAP, GMS, NA ONLY	6GB RAM/64GB ROM	SE4720 2D Imager and Integrated NFC	4680 mAh Standard Battery
TC530E-0T1E1B1001-NA	LAN: Wi-Fi 6, 16MP RFC, 8MP FFC, WITH SECURE ELEMENT, WARM SWAP, GMS, NA ONLY	6GB RAM/64GB ROM	SE4720 2D Imager and Integrated NFC	4680 mAh Standard Battery
TC530E-0T1K1B1000-NA	LAN: Wi-Fi 6, 16MP RFC, 8MP FFC, WARM SWAP, GMS, NA ONLY	6GB RAM/64GB ROM	SE55 2D Imager Advanced Range and Integrated NFC	4680 mAh Standard Battery
TC530E-0T1K6B1000-NA	LAN: Wi-Fi 6, 16MP RFC, 8MP FFC, WARM SWAP, GMS, NA ONLY	8GB RAM/128GB ROM	SE55 2D Imager Advanced Range and Integrated NFC	4680 mAh Standard Battery
TC530E-0T1E1B1000-A6	LAN: Wi-Fi 6, 16MP RFC, 8MP FFC, WARM SWAP, GMS, ROW ONLY	6GB RAM/64GB ROM	SE4720 2D Imager and Integrated NFC	4680 mAh Standard Battery

Table 1 WLAN Configurations (Continued)

Configuration	Description	Memory	Data Capture Options	Battery
TC530E-0T1E1B1000-A6	LAN: Wi-Fi 6, 16MP RFC, 8MP FFC, WARM SWAP, WITH SECURE ELEMENT, GMS, ROW ONLY	6GB RAM/64GB ROM	SE4720 2D Imager and Integrated NFC	4680 mAh Standard Battery
TC530E-0T1K1B1000-A6	LAN: Wi-Fi 6, 16MP RFC, 8MP FFC, WARM SWAP, GMS, ROW ONLY	6GB RAM/64GB ROM	SE55 2D Imager Advanced Range and Integrated NFC	4680 mAh Standard Battery
TC530E-0T1K7B1B00-A6	LAN: Wi-Fi 6, 16MP RFC, 8MP FFC, WARM SWAP, ROW ONLY	8GB RAM/64GB ROM	SE55 2D Imager Advanced Range and Integrated NFC	4680 mAh BLE Standard Battery
TC530E-0T1E6B1000-A6	LAN: Wi-Fi 6, 16MP RFC, 8MP FFC, WARM SWAP, GMS, ROW ONLY	8GB RAM/128GB ROM	SE4720 2D Imager and Integrated NFC	4680 mAh Standard Battery
TC530E-0T1E6B1B00-A6	LAN: Wi-Fi 6, 16MP RFC, 8MP FFC, WARM SWAP, GMS, ROW ONLY	8GB RAM/128GB ROM	SE4720 2D Imager and Integrated NFC	4680 mAh BLE Standard Battery
TC530E-0T1K6B1000-A6	LAN: Wi-Fi 6, 16MP RFC, 8MP FFC, WARM SWAP, GMS, ROW ONLY	8GB RAM/128GB ROM	SE55 2D Imager Advanced Range and Integrated NFC	4680 mAh Standard Battery

Table 2 WWAN Configurations

Configuration	Description	Memory	Data Capture Options	Battery
TC58AE-3T1E1B1A10-NA	WAN: 5G FR1, CBRS, Wi-Fi 6, 16MP RFC, 8MP FFC, WARM SWAP, GMS, NA ONLY	6GB RAM/64GB ROM	SE4720 2D Imager and Integrated NFC	4680 mAh Standard Battery, compatible wireless charging
TC58AE-3T1J1B1A10-NA	WAN: 5G FR1, CBRS, Wi-Fi 6, 16MP RFC, 8MP FFC, WITH SECURE ELEMENT, WARM SWAP, GMS, NA ONLY	6GB RAM/64GB ROM	SE4770 2D Imager and Integrated NFC	4680 mAh Standard Battery, compatible wireless charging

Table 2 WWAN Configurations (Continued)

Configuration	Description	Memory	Data Capture Options	Battery
TC58AE-3T1J1B1A11-NA	WAN: 5G FR1, CBRS, Wi-Fi 6, 16MP RFC, 8MP FFC, WITH SECURE ELEMENT, WARM SWAP, GMS, NA ONLY	6GB RAM/64GB ROM	SE4770 2D Imager and Integrated NFC	4680 mAh Standard Battery, compatible wireless charging
TC58AE-3T1K6B1A10-NA	WAN: 5G FR1, CBRS, Wi-Fi 6, 16MP RFC, 8MP FFC, WARM SWAP, GMS, NA ONLY	8GB RAM/128GB ROM	SE55 2D Imager Advanced Range and Integrated NFC	4680 mAh Standard Battery, compatible wireless charging
TC58AE-3T1K6B1A11-NA	WAN: 5G FR1, CBRS, Wi-Fi 6, 16MP RFC, 8MP FFC, WITH SECURE ELEMENT, WARM SWAP, GMS, NA ONLY	8GB RAM/128GB ROM	SE55 2D Imager Advanced Range and Integrated NFC	4680 mAh Standard Battery, compatible wireless charging
TC58BE-3T1E1B1A80-A6	WAN: 5G FR1, CBRS, Wi-Fi 6, 16MP RFC, 8MP FFC, WARM SWAP, GMS, ROW ONLY	6GB RAM/64GB ROM	SE4720 2D Imager and Integrated NFC	4680 mAh Standard Battery, compatible wireless charging
TC58BE-3T1J1B1A81-A6	WAN: 5G FR1, CBRS, Wi-Fi 6, 16MP RFC, 8MP FFC, WITH SECURE ELEMENT, WARM SWAP, GMS, ROW ONLY	6GB RAM/64GB ROM	SE4770 2D Imager and Integrated NFC	4680 mAh Standard Battery, compatible wireless charging
TC58BE-3T1K7B1E70-A6	WAN: 5G FR1, CBRS, Wi-Fi 6, SE55 IMAGER, 16MP RFC, 8MP FFC, WARM SWAP, GMS, ROW ONLY	6GB RAM/64GB ROM	SE55 2D Imager Advanced Range and Integrated NFC	7000 mAh Standard Battery, compatible wireless charging
TC58BE-3T1E6B1A80-A6	WAN: 5G FR1, CBRS, Wi-Fi 6, 16MP RFC, 8MP FFC, WARM SWAP, GMS, ROW ONLY	8GB RAM/128GB ROM	SE4720 2D Imager and Integrated NFC	4680 mAh Standard Battery, compatible wireless charging
TC58BE-3T1J6B1A80-A6	WAN: 5G FR1, CBRS, Wi-Fi 6, 16MP RFC, 8MP FFC, WARM SWAP, GMS, ROW ONLY	8GB RAM/128GB ROM	SE4770 2D Imager and Integrated NFC	4680 mAh Standard Battery, compatible wireless charging

Table 2 WWAN Configurations (Continued)

Configuration	Description	Memory	Data Capture Options	Battery
TC58BE-3T1J6B1E80-A6	WAN: 5G FR1, CBRS, Wi-Fi 6, 16MP RFC, 8MP FFC, WARM SWAP, GMS, ROW ONLY	8GB RAM/128GB ROM	SE4770 2D Imager and Integrated NFC	7000 mAh Standard Battery, compatible wireless charging
TC58BE-3T1K6B1A80-A6	WAN: 5G FR1, CBRS, Wi-Fi 6, 16MP RFC, 8MP FFC, WARM SWAP, GMS, ROW ONLY	8GB RAM/128GB ROM	SE55 2D Imager Advanced Range and Integrated NFC	4680 mAh Standard Battery, compatible wireless charging
TC58BE-3T1K6B1W81-A6	WAN: 5G FR1, CBRS, Wi-Fi 6, 16MP RFC, 8MP FFC, WITH SECURE ELEMENT, WARM SWAP, GMS, ROW ONLY	8GB RAM/128GB ROM	SE55 2D Imager Advanced Range and Integrated NFC	4680 mAh Standard Battery, compatible wireless charging

Table 3 RFID Configurations

Configuration	Description	Memory	Data Capture Options	Battery
TC530R-0T1E1B1000-EA	LAN: Wi-Fi 6, 16MP RFC, 8MP FFC, WARM SWAP, GMS, EU/UK	6GB RAM/64GB ROM	SE4720 2D Imager and Integrated NFC	4680 mAh Standard Battery
TC530R-0T1E1B1000-RW	LAN: Wi-Fi 6, 16MP RFC, 8MP FFC, WARM SWAP, GMS, ANZ ONLY	6GB RAM/64GB ROM	SE4720 2D Imager and Integrated NFC	4680 mAh Standard Battery
TC530R-0T1E1B1000-US	LAN: Wi-Fi 6, 16MP RFC, 8MP FFC, WARM SWAP, NA ONLY	6GB RAM/64GB ROM	SE4720 2D Imager and Integrated NFC	4680 mAh Standard Battery

Notational Conventions

The following notational conventions make the content of this document easy to navigate.

- **Bold** text is used to highlight the following:
  - Dialog box, window, and screen names
  - Dropdown list and list box names
  - Checkbox and radio button names
  - Icons on a screen
  - Key names on a keypad
  - Button names on a screen
- Bullets (•) indicate:
  - Action items
  - List of alternatives
  - Lists of required steps that are not necessarily sequential
- Sequential lists (for example, those that describe step-by-step procedures) appear as numbered lists.

Icon Conventions

The documentation set is designed to give the reader more visual clues. The following visual indicators are used throughout the documentation set.

NOTE: The text here indicates information that is supplemental for the user to know and that is not required to complete a task.

IMPORTANT: The text here indicates information that is important for the user to know.

CAUTION: If the precaution is not heeded, the user could receive a minor or moderate injury.

WARNING: If danger is not avoided, the user CAN be seriously injured or killed.

DANGER: If danger is not avoided, the user WILL be seriously injured or killed.

Service Information

If you have a problem with your equipment, contact Zebra Global Customer Support for your region. Contact information is available at: zebra.com/support.

When contacting support, please have the following information available:

- Serial number of the unit
- Model number or product name
- Software/firmware type and version number

Zebra responds to calls by email, telephone, or fax within the time limits set forth in support agreements.

If your problem cannot be solved by Zebra Customer Support, you may need to return your equipment for servicing and will be given specific directions. Zebra is not responsible for any damages incurred during shipment if the approved shipping container is not used. Shipping the units improperly can possibly void the warranty.

If you purchased your Zebra business product from a Zebra business partner, contact that business partner for support.

NFC Wayfinding System Disclosure Statement

All uses of the NFC Wayfinding System require the execution of the NFC Forum Wayfinding Mark Trademark License Agreement.

This click-through license and all creative assets are available on the NFC Forum website at nfc-forum.org.

The license agreement for the NFC Wayfinding System provides limited indemnification for licensed users of the marks in those jurisdictions where it is registered. Licensed users are not shielded from liability in jurisdictions where the marks are not registered or in connection with products or services not specified in the registration of that jurisdiction. For a complete list of registered jurisdictions, please contact the NFC Forum.

The NFC Forum registered N-Mark is a separate mark with a different license and terms. Please visit the NFC Forum website for additional details.

Determining Software Versions

Before contacting Customer Support, determine the current software version on your device.

1. Swipe down from the Status bar with two fingers to open the Quick Access panel, and then touch ⚙.
2. Touch **About phone**.

3. Scroll to view the following information:
   - Device name
   - Phone number (sim slot 1 and 2) (TC58e only)
   - Battery information
   - Emergency information (TC58e)
   - Legal information
   - SW components
   - SIM status (TC58e only)
   - Model
   - IMEI (TC58e only)
     - **IMEI** - Displays the IMEI number for the device.
     - **IMEI SV** - Displays the IMEI software version (SV) number for the device.
   - Android version
     - Android security patch version
     - Google Play system update
     - Baseband version (TC58e only)
     - Kernel version
     - Build number
   - Device identifiers
     - IP address
     - Wi-Fi MAC address
     - Device Wi-Fi MAC address
     - Bluetooth address
     - Up time
     - Build Fingerprint
     - Build number

Determining the Serial Number

Before contacting Customer Support, determine the serial number of your device.

- Swipe down from the Status bar with two fingers to open the Quick Access panel, and then touch ⚙.
- Touch **About phone**.
- Touch **Model**.

  The **Serial Number** displays.

Getting Started

This section provides information to get the device up and running for the first time.

Unpacking the Device

Unpacking the device from the box.

1. Carefully remove all protective material from the device and save the shipping container for later storage and shipping.
2. Verify that the following were received:
   - Touch computer
   - ≥17.7 Watt hours (min) / ≥4,680 mAh PowerPrecision+ Lithium-ion battery
   - Regulatory guide
3. Inspect the equipment for damage. If any equipment is missing or damaged, contact the Global Customer Support Center immediately.
4. Before using the device for the first time, remove the protective shipping film that covers the scan window, display, and camera window.

Features

This section lists the features of the TC53e, TC53e-RFID, and TC58e.

Figure 1 Front and Side Views

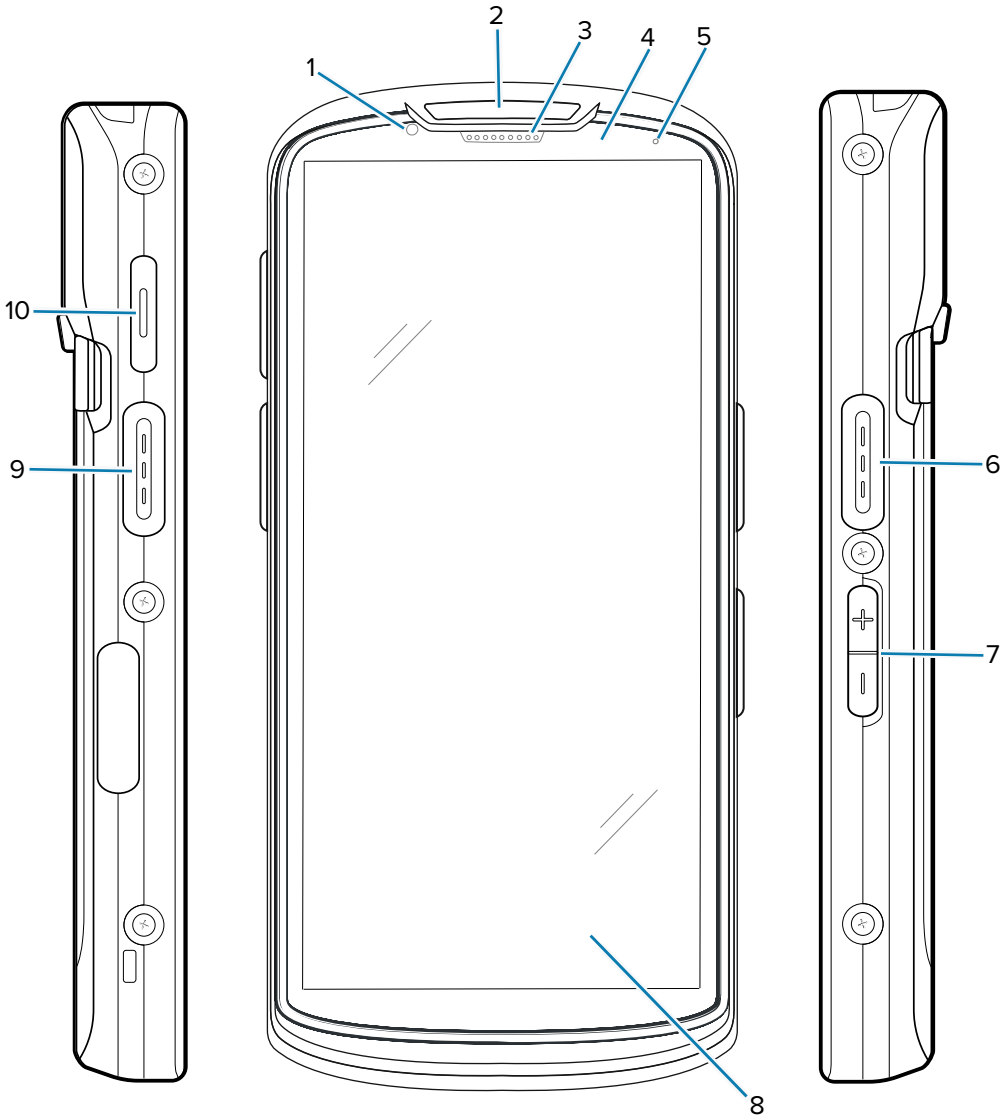

Table 4 Front and Side Items

Number	Item	Description
1	Front camera (8MP)	Takes photos and videos.
2	Scan LED	Indicates data capture status.

Table 4 Front and Side Items (Continued)

Number	Item	Description
3	Receiver	Use for audio playback in Handset mode. For WWAN configurations only, the receiver design differs (three holes): 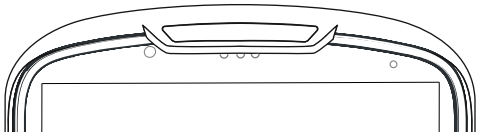
4	Proximity/light sensor	Determines proximity and ambient light for controlling display backlight intensity.
5	Battery status LED	Indicates battery charging status while charging and application-generated notifications.
6, 9	Scan button	Initiates data capture (programmable).
7	Volume up/down button	Increase and decrease audio volume (programmable).
8	6 in. LCD touch screen	Displays all information needed to operate the device.
10	PTT button	Typically used for PTT communications.

Figure 2 Back and Top View

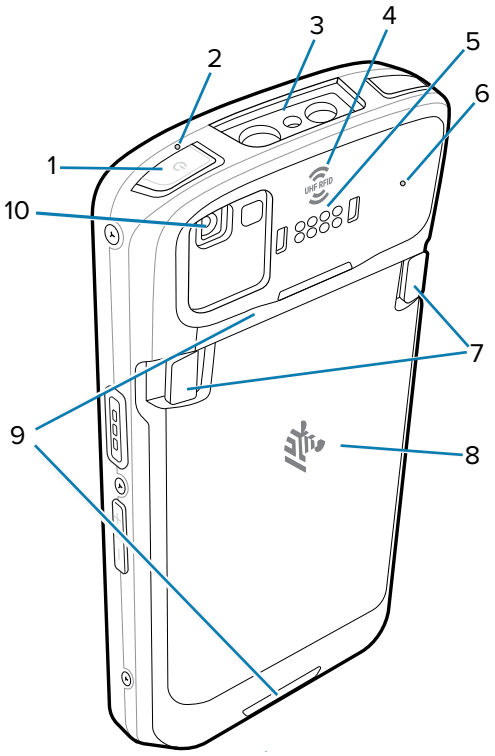

Table 5 Back and Top Items

Number	Item	Description
1	Power button	Turns the display on and off. Press and hold to power off, restart, or lock the device.
2, 6	Microphone	Use for communications in Handset/Handsfree mode, audio recording, and noise cancellation.
3	Exit window	Provides data capture using the imager.
4	UHF RFID	Integrated RFID. For premium RFID configurations only. **NOTE:** If an RFD40 or RFD90 sled is connected to the device, it overrides the integrated RFID.
5	Back common I/O 8 pins	Provides host communications, audio, and device charging via cables and accessories.
7	Battery release latches	Pinch both latches in and lift up to remove the battery.
8	Battery	Provides power to the device.
9	Hand strap points	Attachment points for the hand strap.
10	Rear camera (16MP) with flash	Takes photos and videos with flash to provide illumination for the camera.

Figure 3 Bottom Views

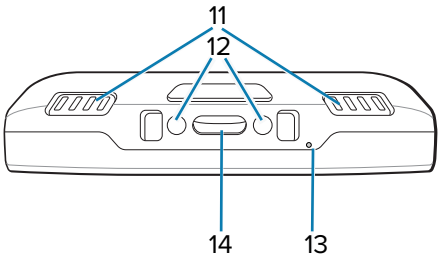

Table 6 Bottom Items

Number	Item	Description
11	Speaker	Provides audio output for video and music playback. Provides audio in speakerphone mode.
12	DC input pins	Power/ground for charging (5VDC through 9VDC).
13	Microphone	Use for communications in Handset/Handsfree mode, audio recording, and noise cancellation.
14	USB Type C and 2 charge pins	Provides power and communications to the device using an I/O USB-C interface with 2 charge pins.

StrongBox Secure Element

Secure element (SE) is a dedicated microprocessor within a device designed to provide a highly secure environment for storing sensitive data and executing cryptographic operations. It offers secure protection against physical tampering and unauthorized access, ensuring that critical information, such as encryption keys, payment data, and biometric data, remains secure.

SE is available on certain device configurations (go to Configurations for a list of devices that support SE).

The devices have an extra hardware security chip for secure key storage, accessible to applications through the StrongBox feature in Android's KeyStore. Utilize StrongBox on apps for added protection.

Benefits of StrongBox SE:

- Enhanced security - Protects sensitive data and operations against attacks.
- Data protection - Keeps encryption keys and personal info safe and private.
- Increased Trust - Boosts user confidence in secure transactions and identity checks.

Google APIs support SE operations. For the APIs, refer to Android KeyStore System.

Setting Up the Device

This section describes assembling and powering on the device for the first time.

To start using the device for the first time:

1. Install a nano SIM card (TC58e only).
2. Install a micro Secure Digital (SD) card (optional).
3. Install the battery.
4. Install hand strap (optional).
5. Charge the device.
6. Power on the device.

Installing a microSD Card

The microSD card slot provides secondary non-volatile storage. The slot is located under the battery pack. Refer to the documentation provided with the card for more information, and follow the manufacturer's recommendations for use.

CAUTION—ESD: Follow proper electrostatic discharge (ESD) precautions to avoid damaging the MicroSD card. Proper ESD precautions include, but are not limited to, working on an ESD mat and ensuring the operator is properly grounded.

1. Lift the access door.

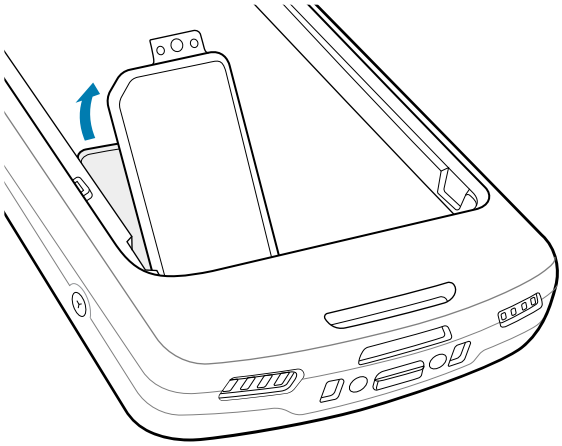

2. Slide the microSD card holder to the Open position.

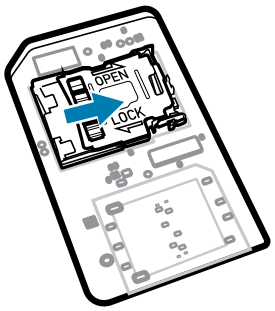

3. Lift the microSD card holder door.

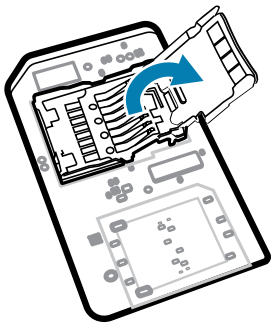

4. Insert the microSD card into the card holder, ensuring the card slides into the holding tabs on each side of the door.

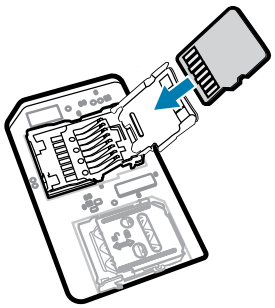

5. Close the microSD card holder.

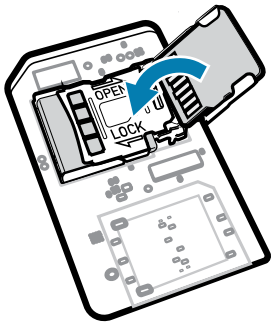

6. Slide the microSD card holder to the Lock position.

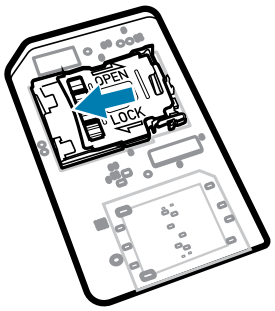

IMPORTANT: The access cover must be replaced and securely seated to ensure proper device sealing.

7. Reinstall the access door.

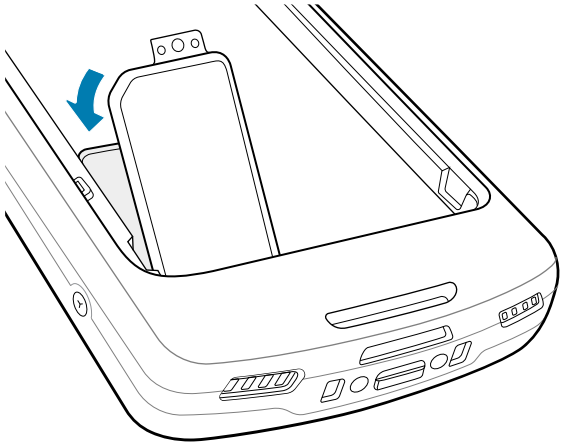

Installing a SIM Card

This section describes how to install a SIM card, which is required to make calls, send text messages, and transfer data over a cellular network. The slot is located under the battery pack.

CAUTION—ESD: Follow proper electrostatic discharge (ESD) precautions to avoid damaging the SIM card. Proper ESD precautions include, but are not limited to, working on an ESD mat and ensuring the operator is properly grounded.

1. Lift the access door.

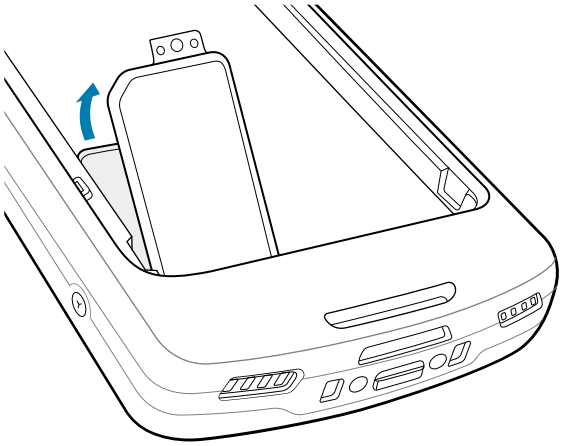

2. Slide the SIM card holder to the unlock position.

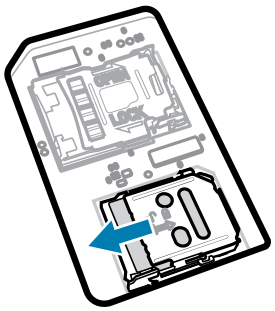

3. Lift the SIM card holder door.

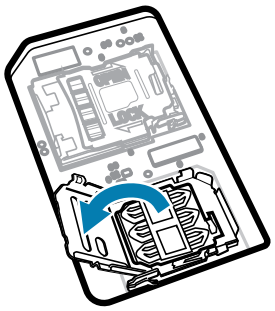

4. Place the SIM card into the card holder with the contacts facing down.

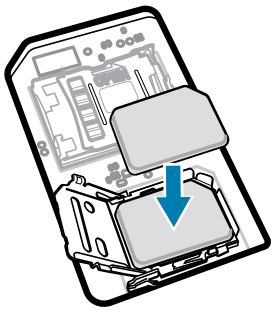

5. Close the SIM card holder door.

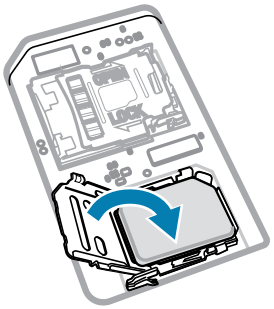

6. Slide the SIM card holder to the lock position.

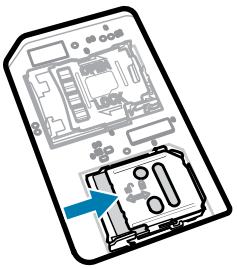

NOTE: The access door must be replaced and securely seated to ensure proper device sealing.

7. Reinstall the access door.

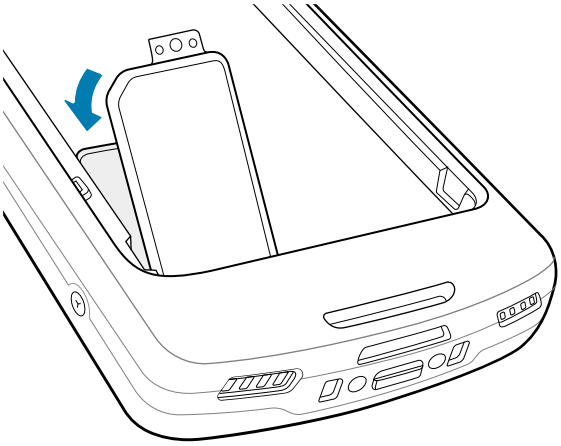

The Rechargeable Li-Ion Wireless Battery

For TC58e WWAN devices only, use a rechargeable Li-Ion battery to facilitate wireless charging.

NOTE: The rechargeable Li-Ion wireless battery must be used along with the device in the Zebra Wireless Charge Vehicle Cradle or Qi-certified wireless chargers.

The BLE Beacon

The rechargeable Li-Ion battery facilitates Bluetooth Low Energy (BLE) Beacon. When enabled, the battery transmits a BLE signal for up to seven days while the device is powered off due to battery depletion.

NOTE: The device transmits a Bluetooth beacon only when it is powered off or in airplane mode.

For additional information on configuring the Secondary BLE settings, see techdocs.zebra.com/emdk-for-android/13-0/mx/beaconmgr/.

Installing the Battery

This section describes how to install a battery into the device.

NOTE: Do not put any labels, asset tags, engravings, stickers, or other objects in the battery well. Doing so may compromise the intended performance of the device or accessories. Performance levels, such as sealing [Ingress Protection (IP)], impact performance (drop and tumble), functionality, or temperature resistance, could be affected.

1. Insert the battery, bottom first, into the battery compartment in the back of the device.
2. Press the battery down until it snaps into place.

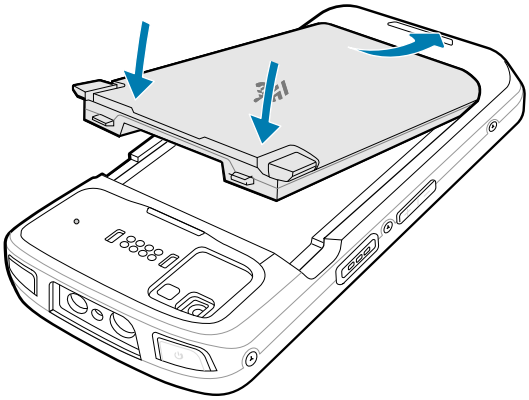

Charging the Device

Use only Zebra charging accessories and batteries to achieve optimal charging results. Charge batteries at room temperature with the device in Sleep mode.

The device goes into Sleep mode when you press Power or after a period of inactivity.

A battery charges from fully depleted to 90% in approximately 2 hours. In many cases, a 90% charge provides enough charge for daily use. Depending on the usage profile, a full 100% charge may last for approximately 14 hours of use.

The device or accessory always performs battery charging in a safe and intelligent manner and indicates when charging is disabled due to abnormal temperatures via its LED, and a notification appears on the device display.

Temperature	Battery Charging Behavior
20 to 45°C (68 to 113°F)	Optimal charging range.

Temperature	Battery Charging Behavior
0 to 20°C (32 to 68°F) / 45 to 50°C (113 to 122°F)	Charging slows to optimize the JEITA requirements of the cell.
Below 0°C (32°F) / Above 50°C (122°F)	Charging stops.
Above 55°C (131°F)	The device shuts down.

To charge the main battery:

1. Connect the charging accessory to the appropriate power source and connect it to the device.
2. Insert the device into a cradle or attach to a power cable (minimum 9 VDC / 2 A).

NOTE:

The device turns on and begins charging. The Charging/Notification LED blinks amber while charging, then turns solid green when fully charged.

Charging the Device by USB Cable

The Rugged Charge/USB Cable inserts into the bottom of the device. When attached to the device, the cable allows charging and data transfer to a host computer.

NOTE: Not all USB cables support data transfer. Before attempting data transfer, ensure the USB cable supports it.

1. Locate the USB-C port (1).

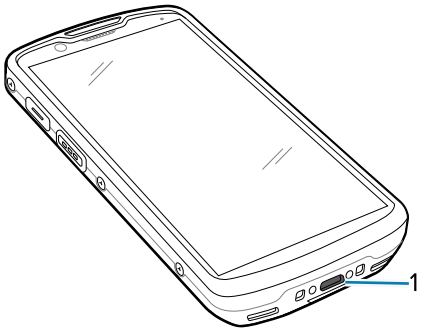

2. Insert the USB-C cable into the USB-C port on the device.

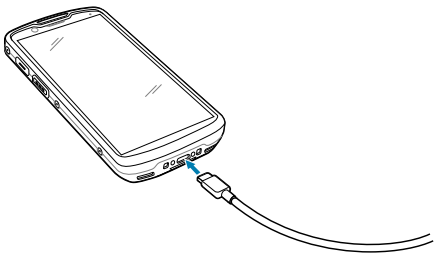

3. Connect the USB connector to the power supply.

NOTE: Go to Power Supply with Plug Adapters for information on setting up the power supply. By default, the device includes an interface connector. If the interface connector is removed for USB-C cable connectivity, it must be replaced before charging or receiving an Ethernet IP address when placed in a cradle.

4. Plug the power supply into a power outlet.

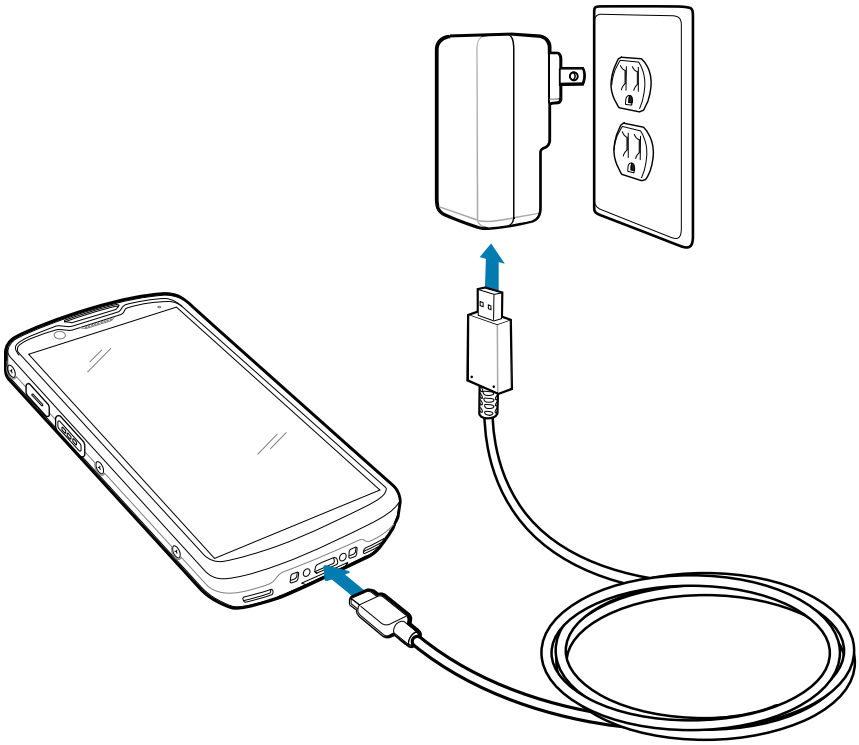

Charging Indicators

The charging/notification LED indicates the charging status.

Table 7 Charging/Notification LED Charging Indicators

State	LED Color	Indications
Off		The device is not charging. • The device is not inserted correctly in the cradle or connected to a power source. • The charger/cradle is not powered.
Slow Blinking Amber (1 blink every 4 seconds)		The device is charging.
Slow Blinking Red (1 blink every 4 seconds)		The device is charging, but the battery is at the end of its useful life.

Table 7 Charging/Notification LED Charging Indicators (Continued)

State	LED Color	Indications
Solid Green		Charging is complete.
Solid Red		Charging is complete, but the battery is at the end of its useful life.
Fast Blinking Amber (2 blinks/second)		Charging error. For example: • Temperature is too low or too high. • Charging has gone on too long without completion (typically 12 hours).
Fast Blinking Red (2 blinks/second)		Charging error, and the battery is at the end of its useful life. For example: • The temperature is too low or too high. • Charging has gone on too long without completion (typically 12 hours).

Charging the Spare Battery

This section provides information on charging a spare battery. Use only Zebra charging accessories and batteries to achieve optimal charging results.

1. Insert a spare battery into the spare battery slot.

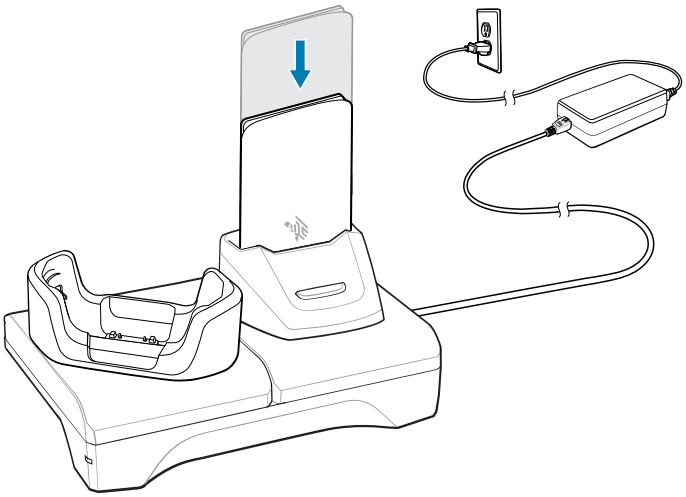

2. Ensure the battery is seated properly.

   The Spare Battery Charging LED blinks, indicating charging.

The battery charges from fully depleted to 90% in approximately 2.5 hours. In many cases, the 90% charge provides plenty of charge for daily use. Depending on the usage profile, a full 100% charge may last for approximately 14 hours of use.

Spare Battery Charging Indicators

Table 8 Spare battery LED Charging Indicators

Indication	LED	Description
Solid amber		Spare battery is charging.
Solid amber with alternate bright amber		Best spare battery is charging. Not available on 2-Slot USB/Ethernet Cradle.
Solid green		Spare battery charging is complete.
Solid green with alternate bright green		Best spare battery charging is complete. Not available on 2-Slot USB/ Ethernet Cradle.
Solid red		One of the following: • Spare battery is charging and battery is at the end of useful life. • Charging complete and battery is at the end of useful life.
Fast blinking red (2 blinks/ second)		Error in charging; check placement of spare battery. The battery is at the end of useful life.
Off		One of the following: • No spare battery in slot. • Spare battery not placed in slot correctly. • Cradle is not powered.

Replacing the Battery

This section describes how to replace the battery.

CAUTION: The battery is designed to be removed by hand. Do not use tools to remove the battery.

NOTE: Do not put labels, asset tags, engravings, stickers, or other objects in the battery well, as this might compromise the performance of the device or accessories. Performance levels, such as sealing [Ingress Protection (IP)], impact performance (drop and tumble), functionality, or temperature resistance could be affected.

1. Press and hold the Power button until the menu displays.
2. Touch **Power Off**.
3. If the hand strap is attached, slide the hand strap clip away from the bottom of the device and then lift.

4. Press the two battery latches down.

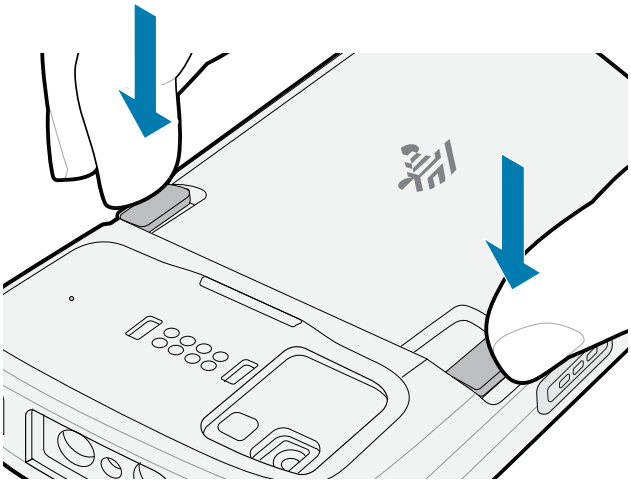

CAUTION: Do not attempt to insert fingers under the latches when pulling on the battery. Damage to the latches may occur.

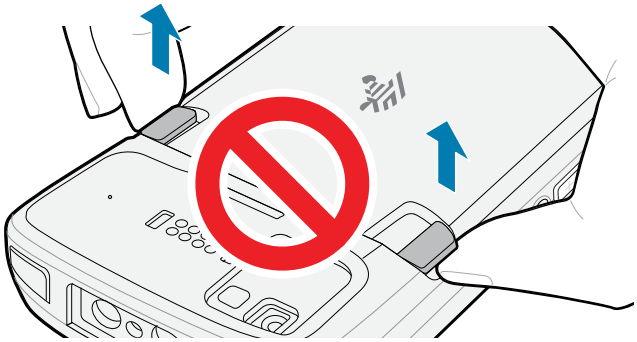

5. While pressing the latches down, press the two latches in toward the center of the device. The latches must be pressed in completely to release the battery.

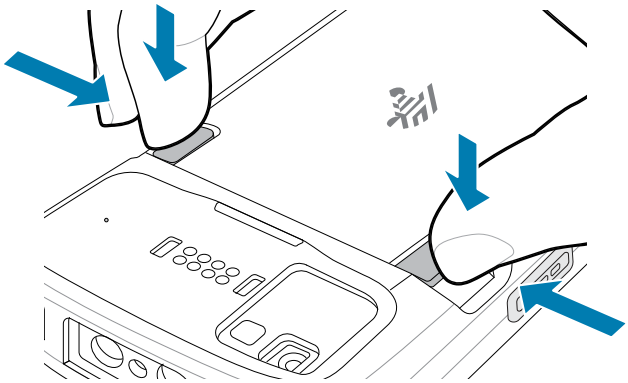

6. Lift the battery from the device.

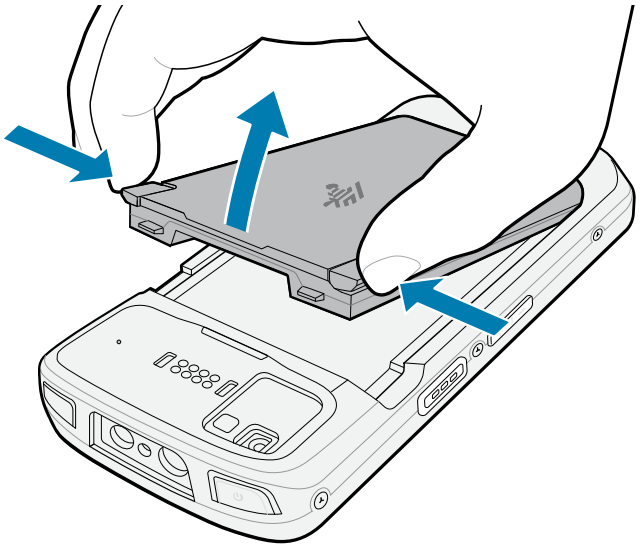

7. Insert the replacement battery, bottom first, into the battery compartment in the back of the device.
8. Press the battery down until the battery release latches snap into place.
9. Replace the hand strap if required.
10. Hold the Power button to turn on the device.

Replacing the MicroSD Card

This section describes how to replace a microSD card.

CAUTION—ESD: Follow proper electrostatic discharge (ESD) precautions to avoid damaging the MicroSD card. Proper ESD precautions include, but are not limited to, working on an ESD mat and ensuring the operator is properly grounded.

IMPORTANT: Do not put any labels, asset tags, engravings, stickers, or other objects in the battery well. Doing so may compromise the intended performance of the device or accessories. Performance levels such as sealing [Ingress Protection (IP)], impact performance (drop and tumble), functionality, or temperature resistance could be affected.

1. Press and hold the Power button until the menu displays.
2. Touch **Power Off**.
3. If the hand strap is attached, slide the hand strap clip away from the bottom of the device and then lift.

4. Press the two battery latches down.

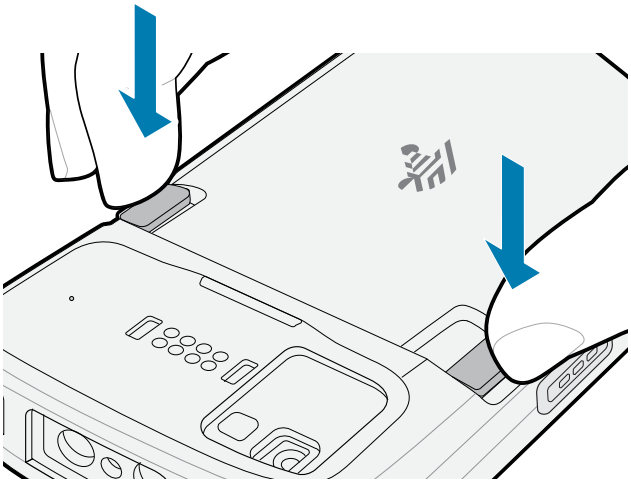

CAUTION: Do not attempt to insert fingers under the latches when pulling on the battery. Damage to the latches may occur.

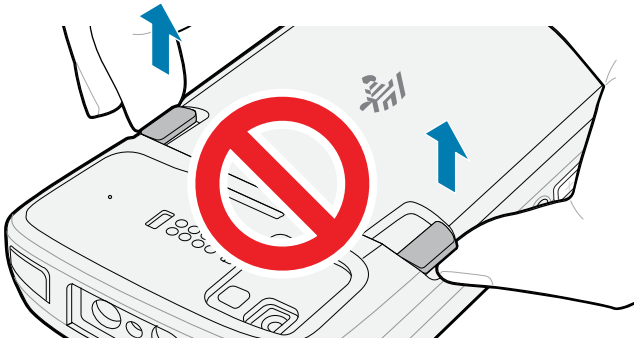

5. While pressing the latches down, press the two latches in toward the center of the device. The latches must be pressed in completely to release the battery.

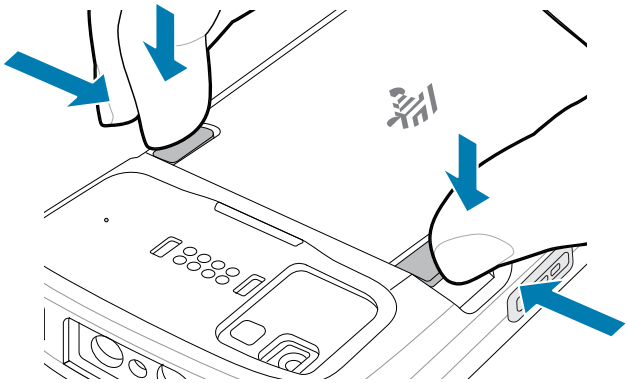

6. Lift the battery from the device.

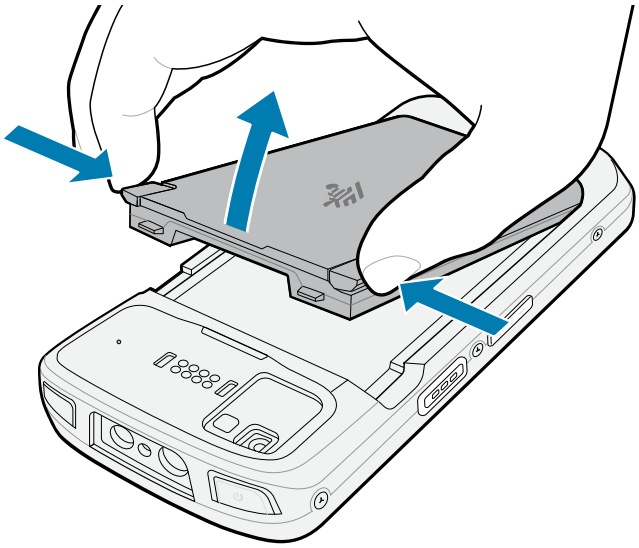

7. Lift the access door.

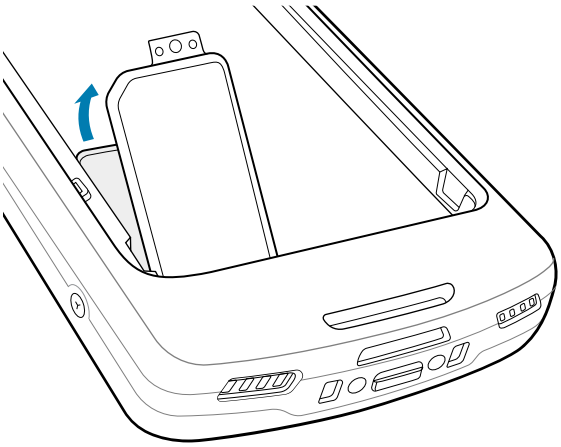

8. Slide the microSD card holder door to the Open position and lift it.
9. Remove the old microSD card and insert the new microSD card into the card holder, ensuring that the card slides into the holding tabs on each side of the door.
10. Close the microSD card holder door and slide it to the Lock position.

11. Reinstall the access door.

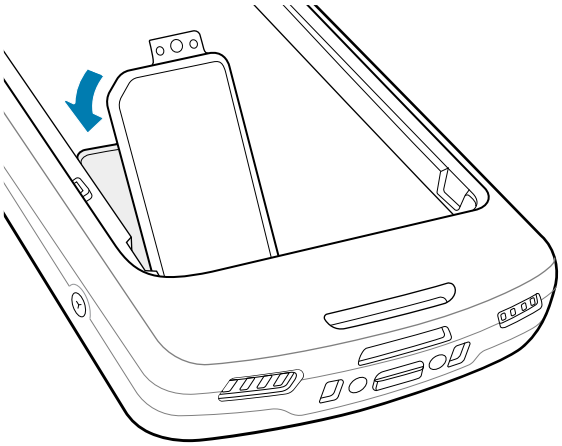

IMPORTANT: The access door must be replaced and securely seated to ensure proper device sealing.

12. From the back of the device, insert the battery, bottom first, into the battery compartment.
13. Press the battery down until it snaps into place.
14. Replace the hand strap, if required.
15. Press and hold the Power button to turn on the device.

Replacing the SIM Card

This section describes how to replace a SIM card (TC58e only).

CAUTION—ESD: Follow proper electrostatic discharge (ESD) precautions to avoid damaging the SIM card. Proper ESD precautions include, but are not limited to, working on an ESD mat and ensuring the operator is properly grounded.

IMPORTANT: Do not put any labels, asset tags, engravings, stickers, or other objects in the battery well. Doing so may compromise the intended performance of the device or accessories. Performance levels such as sealing [Ingress Protection (IP)], impact performance (drop and tumble), functionality, or temperature resistance could be affected.

1. Press and hold the Power button until the menu displays.
2. Touch **Power off**.
3. If the hand strap is attached, slide the hand strap clip away from the bottom of the device and then lift.

4. Press the two battery latches down.

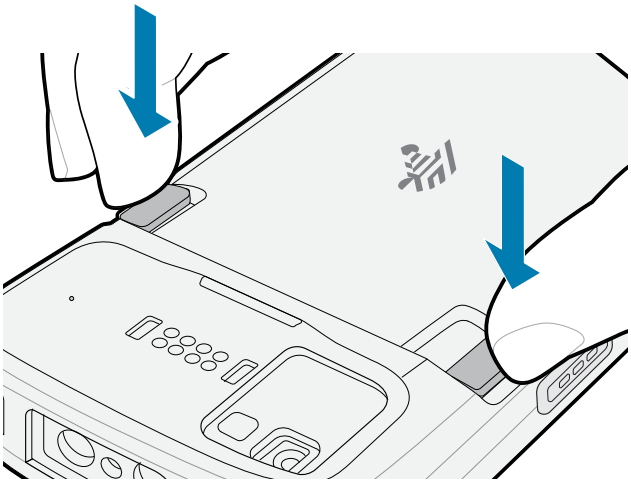

CAUTION: Do not attempt to insert fingers under the latches when pulling on the battery. Damage to the latches may occur.

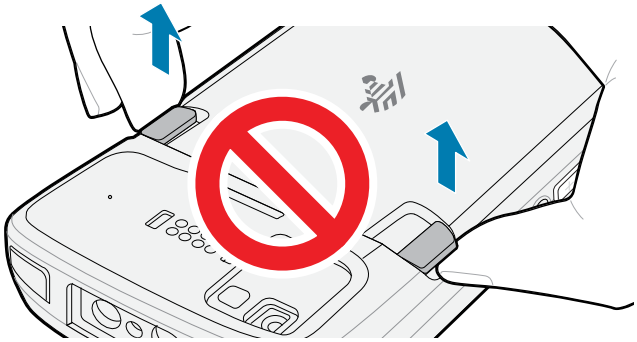

5. While pressing the latches down, press the two latches in toward the center of the device. The latches must be pressed in completely to release the battery.

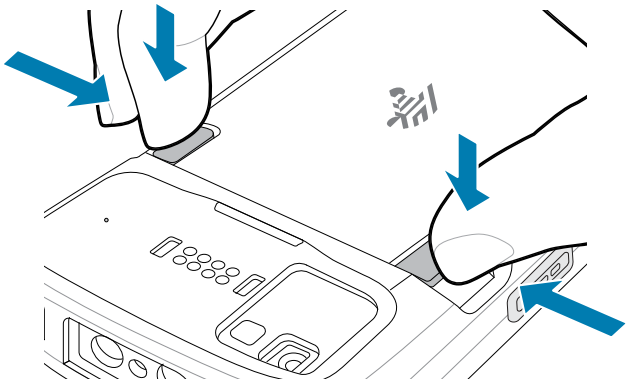

6. Lift the battery from the device.

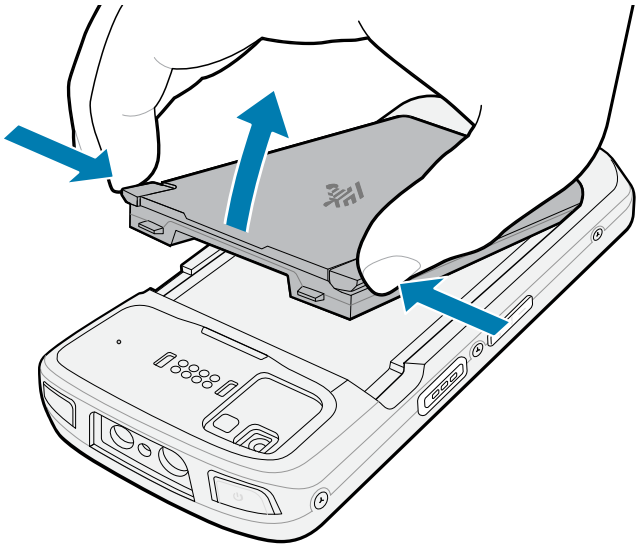

7. Lift the access door.

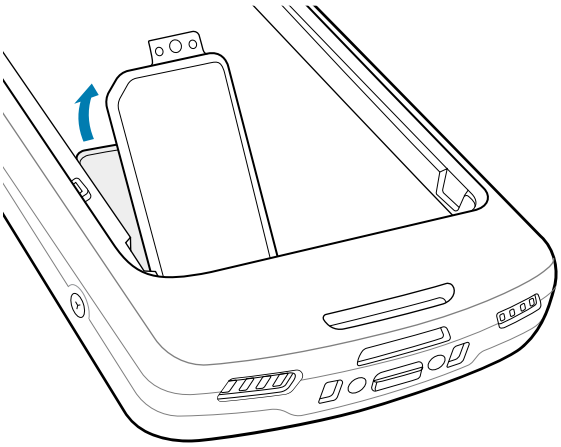

8. Slide the SIM card holder door to the left to unlock it.
9. Lift the SIM card holder door and remove the old SIM card.
10. With the contacts facing down, place the new SIM card into the card holder.
11. Close the SIM card holder door and slide it to the right to lock it.

12. Reinstall the access door.

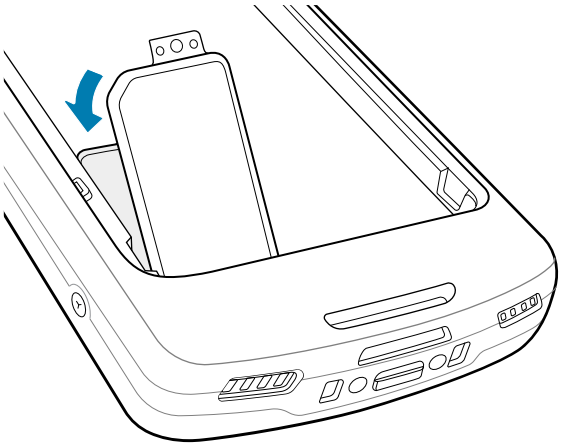

IMPORTANT: The access door must be replaced and securely seated to ensure proper device sealing.

13. From the back of the device, insert the battery, bottom first, into the battery compartment.

14. Press the battery down until it snaps into place.

15. Replace the hand strap, if required.

16. Press and hold the Power button to turn on the device.

Using the Device

This section explains how to use the device.

Home Screen

Turn on the device to display the Home screen. Depending on how your system administrator configured your device, your Home screen may appear differently than the graphics in this section.

After the device goes into Sleep mode, the Home screen displays with the lock icon. Touch the screen and swipe up to unlock. The Home screen provides four additional screens to place widgets and shortcuts. Touch and hold on an icon, then move it to relocate the icon on one of the other screens. Swipe the Home screen left or right to view the additional screens.

NOTE: By default, AOSP devices do not have the same icons on the Home screen as GMS devices. Icons are shown below for example only.

Home screen icons can be configured by the user and may look different than shown.

TC53e/TC53e-RFID Home Screen	TC58e Home Screen
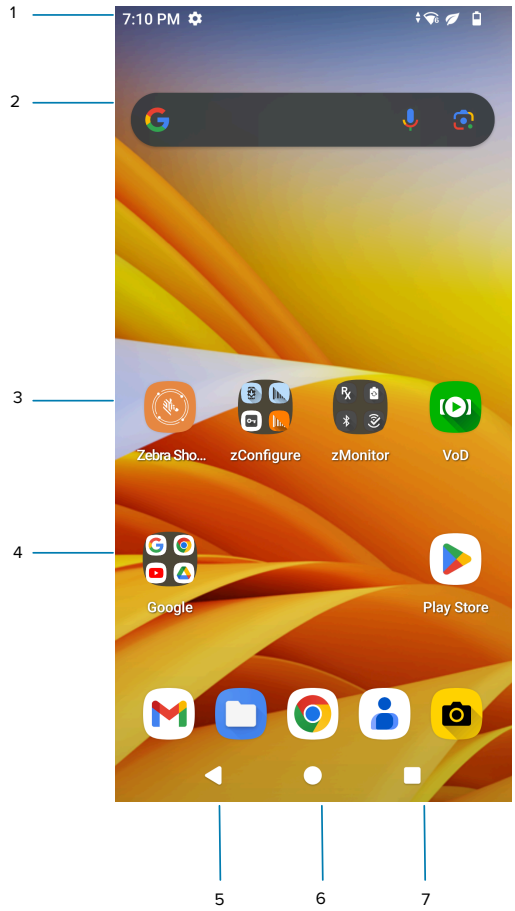	

NOTE: All configurations have the optional Dark theme setting. Go to Setting Dark Theme.

1	Status bar	Displays the time, status icons (right side), and notification icons (left side).
2	Widgets	Launches stand-alone apps that run on the Home screen.
3	Shortcut icons	Opens apps installed on the device.
4	Folder	Contains apps.
5	Back	Displays the previous screen.
6	Home	Displays the home screen.
7	Recent	Displays recently used applications.

Setting the Home Screen Rotation

By default, the Home screen rotation is disabled.

NOTE: Before the Home screen rotation is used, enable auto-rotate in the Quick Access Panel or in the Settings.

1. Touch and hold anywhere on the Home screen until the options appear.
2. Touch **Home settings**.
3. Touch the **Allow Home screen rotation** switch.
4. Press **Home**.
5. Rotate the device.
6. Touch and hold anywhere on the Home screen until the options appear.

Status Bar

The Status bar displays the time, notification icons on the left side, and status icons on the right side.

If there are more notifications than can fit in the Status bar, a dot displays, indicating that more notifications exist. Swipe down from the Status bar to open the Notification panel and view all notifications and status icons.

Figure 4 Notifications and Status Icons

1	Notification icons
2	Status icons

Notification Icons

Notification icons indicate app events and messages.

Icon	Description
	The main battery is low.
	More notifications are available for viewing.
	Data is synching.
	Indicates an upcoming event. AOSP devices only.
	Indicates an upcoming event. GMS devices only.
	An Open Wi-Fi network is available. The device is not connected to it.
	Audio is playing.

Icon	Description
	A problem with sign-in or sync has occurred.
	The device is uploading data.
	Animated: the device is downloading data. Static: the download is complete.
	The device is connected to or disconnected from a virtual private network (VPN).
	Preparing internal storage by checking it for errors.
	USB debugging is enabled on the device.
	Call is in progress (WWAN only).
	The mailbox contains one or more voice message (WWAN only).
	A call is on hold (WWAN only).
	A call was missed (WWAN only).
	A wired headset with a boom module is connected to the device.
	A wired headset without a boom module is connected to the device.
	PTT Express Voice client status.
	The RxLogger app is running.
	A Bluetooth scanner is connected to the device.
	A ring scanner is connected to the device in HID mode.

Status Icons

Status icons display system information for the device.

Icon	Description
	Alarm is active.
	Main battery is fully charged.
	Main battery is partially drained.
	Main battery charge is low.
	Main battery charge is very low.
	Main battery is charging.
	All sounds, except media and alarms, are muted. Vibrate mode is active.
	Do Not Disturb mode active.
	Airplane Mode is active. All radios are turned off.
	Bluetooth is on.
	The device is connected to a Bluetooth device.
	Connected to a Wi-Fi network. Indicates the Wi-Fi version number.
	Not connected to a Wi-Fi network or no Wi-Fi signal.
	Connected to an Ethernet network.
	Speakerphone enabled.
	Portable Wi-Fi hotspot is active (WWAN only).
	Connect to a 6E network (WWAN only).[a]

Icon	Description
5G	Connect to a 5G network (WWAN only).[a]
4G LTE	Connected to a 4G LTE/LTE-CA network (WWAN only).[a]
4G	Connected to a DC-HSPA, HSDPA, HSPA+, HSUPA, LTE/LTE-CA or WCMDMA network (WWAN only).[a]
3G	Connected to a 1x-RTT (Sprint), EGDGE, EVDO, EVDV or WCDMA network (WWAN only).[a]
2G	Connected to a GPRS network (WWAN only).[a]
3G	Connected to a WCDMA network (WWAN only).[a]
H	Connected to a DC - HSPA, HSDPA, HSPA+ or HSUPA network (WWAN only).[a]
E	Connected to an EDGE network (WWAN only).[a]
G	Connected to a GPRS network (WWAN only).[a]
1X	Connected to a 1x-RTT (Verizon) network (WWAN only).[a]
R	Roaming from a network (WWAN only).
	No SIM card installed (WWAN only).

[a] Cell network icon that appears is dependent on the carrier/network.

Managing Notifications

Notification icons report the arrival of new messages, calendar events, alarms, and ongoing events. When a notification occurs, an icon appears in the Status bar with a brief description.

Figure 5 Notification Panel

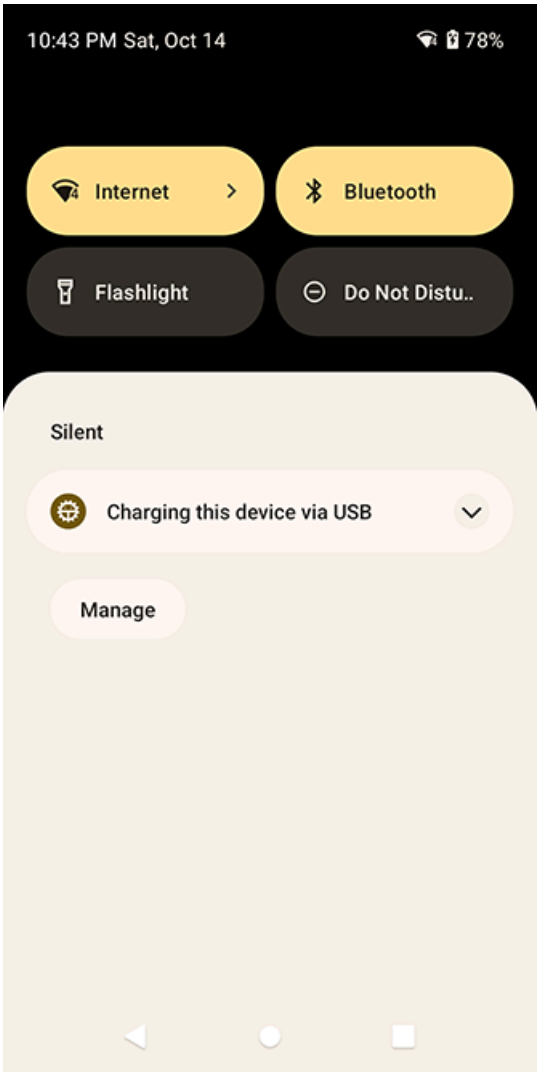

- To view a list of all notifications, open the Notification panel by dragging the Status bar down from the top of the screen.
- To respond to a notification, open the Notification panel and then touch a notification. The Notification panel closes and the corresponding app opens.
- To manage recent or frequently used notifications, open the Notification panel and then touch Manage notifications. Touch the toggle switch next to an app to turn off all notifications, or touch an app for more notification options.
- To clear all notifications, open the Notification panel and then touch **Clear all**. All event-based notifications are removed. Ongoing notifications remain in the list.
- To close the Notification panel, swipe the Notification panel up.

Opening the Quick Access Panel

Use the Quick Access panel to access frequently used settings (for example, Airplane mode).

NOTE: Not all icons are pictured. Icons may vary.

Figure 6 Quick Access Panel

- If the device is locked, swipe down once.
- If the device is unlocked, swipe down once with two fingers, or twice with one finger.
- If the Notification panel is open, swipe down from the Quick Settings bar.

Quick Access Panel Icons

Quick Access panel icons indicate frequently used settings (for example, Airplane mode).

Icon	Description
	Display brightness - Use the slider to decrease or increase the brightness of the screen.
	Internet/Wi-Fi network - Turn Wi-Fi on or off. To open Wi-Fi settings, touch the Wi-Fi network name.
	Bluetooth settings - Turn Bluetooth on or off. To open Bluetooth settings, touch Bluetooth.
	Battery saver - Turn Battery saver mode on or off. When Battery saver mode is on the performance of the device is reduced to preserve battery power (not applicable).
	Invert colors - Invert the display colors.
	Do not disturb - Control how and when to receive notifications.
	Mobile data - Enables or disables data transfer via the WAN. The device is still available for voice calls and texts. To open Mobile data settings, touch and hold (WWAN only).
	Airplane mode - Turn Airplane mode on or off. When Airplane mode is on the device does not connect to Wi-Fi or Bluetooth.
	Auto-rotate - Lock the device's orientation in portrait or landscape mode or set to automatically rotate.
	Flashlight - Turn the flashlight or camera flash on or off. When the flashlight is activated, it stays on unless it is turned off or the camera app is run.
	Location - Enable or disable locationing feature.
	Hotspot - Turn on to share the device's mobile data connection with other devices.
	Data saver - Turn on to prevent some apps from sending or receiving data in the background.
	Night light - Tint the screen amber to make it easier to look at the screen in dim light. Set Night Light to turn on automatically from sunset to sunrise, or at other times.
	Screen cast - Share phone content on Chromecast or a television with Chromecast built-in. On the Cast screen, check the "enable wireless display" option, and then touch "cast screen" to display a list of devices. Touch a device in the list to begin casting.

Icon	Description
	Dark theme - Toggles dark theme on and off. Dark themes reduce the luminance emitted by the screen, while meeting minimum color contrast ratios. It helps improve visual ergonomics by reducing eye strain, adjusting brightness to current lighting conditions, and facilitating screen use in dark environments, while conserving battery power.
	Focus mode - Turn on to pause distracting apps. To open Focus mode settings, touch and hold.
	Bedtime mode - Turn grayscale on and off. Grayscale turns the screen black and white, reducing phone distractions and improving battery life.
	Screen record - Makes a video recording of everything that happens on the screen, with options to include audio and screen touches.
	NFC - Enable or disable NFC communication.
	Wallet - Opens Android wallet.
	Scan QR code - Opens the camera app for QR code reading.
	Extra dim - Reduces screen brightness up to 50%.
	Color correction - Enable to help your device compensate for color blindness.
	Live caption - Enables captions to appear for any media playing, regardless of the device's volume level.
	Calculator - Open the calculator app.

Editing the Quick Access Tiles

The first four setting tiles from the Quick Access panel become the Quick Access tiles on the Notification panel.

Figure 7 Notification Panel

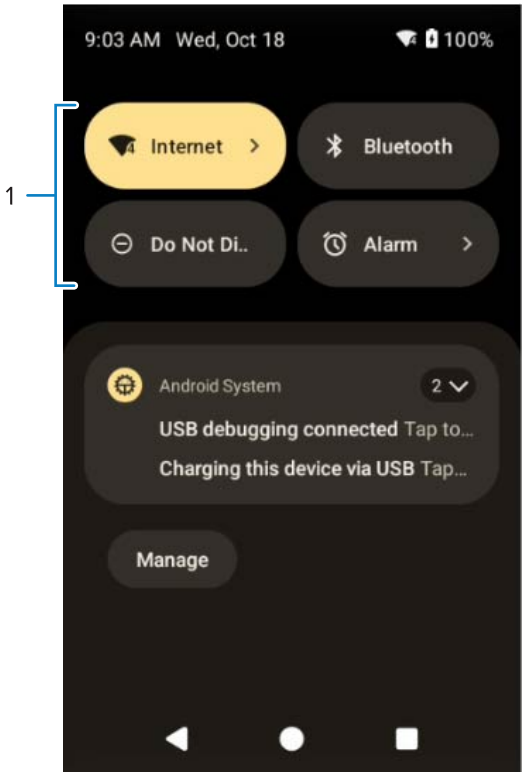

1	Quick access tiles

- Open the Quick Access panel and touch ✎ to edit, add, or remove settings tiles.

Battery Management

Observe the recommended battery optimization tips for the device.

- Set the screen to turn off after a short period of inactivity.
- Reduce screen brightness.
- Turn off all wireless radios when not in use.
- Turn off automatic syncing for Email, Calendar, Contacts, and other apps.
- Minimize the use of apps that keep the device from sleeping, for example, music and video apps.

NOTE: Before checking the battery charge level, remove the device from any AC power source (cradle or cable).

Checking Battery Status

Check the battery status through the Battery Information settings, the Battery Manager app, or the Quick Access panel.

- There are a couple of options to view the battery status:
  - Open **Settings** and touch **About phone** > **Battery Information**.
  - Swipe up from the bottom of the screen to open the **Apps** screen and touch to open the **Battery Manager** app.
- The **Battery present status** indicates if the battery is present.
- The **Battery level** lists the battery charge (as a percentage).
- The **Battery percentage** is also displayed on the Status bar, next to the battery icon.

Monitoring Battery Usage

The Battery screen provides battery charge details and power management options to extend battery life. Different apps display different information. Some apps include buttons that open screens with settings to adjust power use. To turn off apps that consume too much power, touch the square (recent app) button at the bottom of the home screen. Swipe left or right to view recent applications. Swipe up on an application to close it

- Go to **Settings**.
- Touch **Battery**.

To display battery information and power management options for a specific app:

- Go to **Settings**.
- Touch **Apps** > **All apps**.
- Touch an app.
- Touch **App Battery Usage**.

  The power management options display. Use **DISABLE** or **FORCE STOP** to turn off apps that consume too much power.

Low Battery Notification

When the battery charge level drops below the change level in the table below, the device displays a notice to connect the device to power. Charge the battery using one of the charging accessories.

Charge Level Drops Below	Action
18%	Charge the battery soon.
10%	Charge the battery.
4%	Device turns off. Charge the battery.

Turning Off the Radios

1. Swipe down from the Status bar to open the Quick Settings panel.

2. Touch Airplane mode. The airplane icon appears in the Status bar indicating that all the radios are off.

Interactive Sensor Technology

To take advantage of these sensors, applications use API commands. Refer to the Google Android Sensor APIs for more information. For information on the Zebra Android EMDK, go to: techdocs.zebra.com.

The device contains sensors that monitor movement, orientation, and ambient light.

- Gyroscope - Measures angular rotational velocity to detect rotation of the device.
- Accelerometer - Measures the linear acceleration of movement to detect the orientation of the device.
- Digital Compass - The digital compass or magnetometer provides simple orientation in relation to the Earth's magnetic field. As a result, the device always knows which way is North so it can auto-rotate digital maps, depending on the physical orientation of the device.
- Light Sensor - Detects ambient light and adjusts the screen brightness.
- Barometer - Measures atmospheric pressure and height changes to help track the device's location more accurately

Waking the Device

The device goes into Sleep mode when you press **Power** or after a period of inactivity (set in the Display settings window).

1. To wake the device from Sleep mode, press **Power**.

   The Lock screen displays.

2. Swipe the screen up to unlock.
   - If the screen option is set to Swipe, the Home screen displays.
   - If either the PIN or Password screen unlock feature is enabled, a prompt displays. Enter the PIN or password to unlock the device and move to the Home screen.
   - If the Pattern screen unlock feature is enabled, the Pattern screen displays. Swipe the correct pattern between the dots to unlock the device and move to the Home screen.

NOTE: If you enter the PIN, password, or pattern incorrectly five times, you must wait 30 seconds before trying again.

- If you forget the PIN, password, or pattern, contact your system administrator.

USB Communication

Connect the device to a host computer to transfer files between the device and the host computer.

When connecting the device to a host computer, follow the host computer’s instructions for connecting and disconnecting USB devices to avoid damaging or corrupting files. For information on USB communication accessories available for this device, go to Accessories.

1. Connect the Charge/USB-C Cable to the device.
2. Connect the USB connector of the cable to the host computer.

Transferring Files

Use the Transfer files option to copy files between the device and the host computer.

1. Connect the device to a host computer using a USB accessory.
2. On the device, pull down the Notification panel and touch **Charging this device via USB**.

   By default, **No data transfer** is selected.
3. Touch **File Transfer**.

NOTE: After changing the setting to **File Transfer**, and then disconnecting the USB cable, the setting reverts back to **No data transfer**. If the USB cable is reconnected, select **File Transfer** again.

4. On the host computer, open **File Explorer**.
5. Open the SD card or the Internal storage folder.
6. Copy files to and from the device or delete files as required.

Transferring Photos

Use Picture Transfer Protocol (PTP) to copy photos from the device to the host computer.

1. Connect the device to a host computer using a USB accessory.
2. On the device, pull down the Notification panel and touch **Charging this device via USB**.
3. Touch **PTP**.
4. On the host computer, open a file explorer application.
5. Open the SD card or the Internal storage folder.
6. Copy or delete photos as required.

Disconnect from the Host Computer

NOTE: Carefully follow the host computer's instructions to unmount the microSD card and disconnect USB devices correctly to avoid losing information.

1. On the host computer, unmount the device.
2. Remove the device from the USB accessory.

Settings

This section describes the settings on the device.

Accessing Settings

There are multiple ways to access Settings on a device.

- Double swipe from the top of the Home screen to open the Quick Access panel and touch ⚙.
- Swipe from the bottom of the Home screen to view all Apps and touch ⚙.

Display Settings

Use Display settings to change the screen brightness, enable night light, change the background image, enable screen rotation, set screen timeout, enable dark theme, and change font size.

Setting the Screen Brightness Manually

Manually set the screen brightness using the touchscreen.

1. Swipe down with two fingers from the Status bar to open the Quick Access panel.
2. Slide ☼ left or right to adjust the screen brightness level.

Setting the Screen Brightness Automatically

Automatically adjust the screen brightness using the built-in light sensor.

1. Go to **Settings**.
2. Touch **Display**.
3. If disabled, touch **Adaptive brightness** to automatically adjust the brightness.

   By default, **Adaptive brightness** is enabled. Toggle the switch to disable.

Setting Lock Screen Notifications

The lock screen display setting wakes the screen when notifications are received.

1. Go to **Settings**.
2. Touch **Display** > **Lock screen**.

3. In the **What to show** and **When to show** sections, enable or disable an option using the switch.

Setting Screen Timeout

The screen turns off and goes into Suspend mode after the selected period of inactivity.

1. Go to **Settings**.
2. Touch **Display** > **Screen timeout**.
3. Select one of the sleep values:
   - **15 seconds**
   - **30 seconds**
   - **1 minute** (default)
   - **2 minutes**
   - **5 minutes**
   - **10 minutes**
   - **30 minutes**
4. Turn on the **Screen attention** switch to prevent your screen from turning off while you are looking at it.

Setting Dark Theme

The Dark Theme setting reduces the light emitted by the device, making the screen easier to read.

1. Go to **Settings**.
2. Touch **Display** > **Dark theme**.
3. Touch the switch to enable Dark theme.
4. To customize when Dark theme turns on, touch **Schedule**.
   a) Select one of the schedule values:
   - None (default)
   - Turns on at custom time
   - Turns on from sunset to sunrise
   - Turns on at bedtime

Setting Display and Text Sizes

Set the text size (font) in system apps and for the display.

As you adjust the sizes, the **Preview** section displays the changes made.

1. Go to **Settings**.

2. Touch **Display** > **Display size and text**.
   - In **Font size**, slide the circle (or touch - or +) to adjust the text size.
   - In **Display size**, slide the circle (or touch - or +) to adjust the display size.
   - Turn on the **Bold text** switch to improve text visibility.
   - Turn on the **High contrast text** switch to change the text color to black or white, which maximizes the contrast with the background.

Setting Night Light

The Night Light setting tints the screen amber, making the screen easier to look at in low light.

1. Go to **Settings**.
2. Touch **Display** > **Night Light**, and turn on the switch.
3. Touch **Schedule**.
4. Select one of the schedule values:
   - **None** (default)
   - **Turns on at custom time**
   - **Turns on from sunset to sunrise**
5. By default, **Night Light** is disabled. Turn on the switch to enable.
6. Adjust the tint using the **Intensity** slider.

Setting Colors

Select a color scheme for the screen.

1. Go to **Settings**.
2. Touch **Display** > **Colors**.
3. Select one of the color values:
   - **Natural** (default)
   - **Boosted**
   - **Adaptive**

Setting Screen Rotation

By default, screen rotation is enabled.

NOTE: To change the Home Screen rotation, see Setting Home Screen Rotation.

1. Go to **Settings**.
2. Touch **Display** > **Auto-rotate screen**.
3. Touch **Home**.

Setting the Screen Saver

The screen can show photos, a colorful background, or a clock while the device is charging and/or docked.

1. Go to **Settings**.
2. Touch **Display** > **Screen saver**, and turn on the switch.
3. Touch **When to start** to select an option:
   - **Never** (default)
   - **While charging**
   - **While docked and charging**
4. Select one of the screen saver options:
   - **Clock** - Touch **CUSTOMIZE** to select clock settings.
   - **Colors** - It displays the color pattern on the device.
   - **Photo Frame** - Touch **CUSTOMIZE** to select photos on the device.
   - **Photo Table** - Touch **CUSTOMIZE** to select photos on the device.
   - **Photos** - Touch **CUSTOMIZE** to select photos on the device.
5. Touch **Preview** to view a preview of the screen saver.

Setting Screen Orientation

You can change the screen orientation and external screen resolution when the device detects an external monitor.

TC58e only.

1. Go to **Settings**.
2. Touch **Display** > **When device detects external monitor**.
3. Select one of the options:
   - **Rotate screen orientation**
   - **Do not change screen orientation**

Setting External Screen Resolution

TC58e only.

1. Go to **Settings**.
2. Touch **Display** > **External screen resolution**.

3. Select one of the options:
   - **800 x 600**
   - **1024 x 600**
   - **1024 x 768**
   - **1280 x 720**
   - **1280 x 800**
   - **1280 x 1024**
   - **1366 x 768**
   - **1440 x 900**
   - **1600 x 900**
   - **1680 x 1050**
   - **1920 x 1080** (default)
   - **1920 x 1200**
   - **2560 x 1440**

Notification LED Brightness Level

Adjust the brightness of the Notification LED.

The Notification LED indicates the battery charging status while charging and application-generated notifications.

1. Go to **Settings**.
2. Touch **Display** > **Notification LED Brightness level**.
3. Use the slider to set the brightness value (Default: 15).

Setting Charging LED Light

Enable (default) or disable the charging LED light.

1. Go to **Settings**.
2. Touch **Display** > **Charging LED**.
3. Turn the **Charging LED** switch off or on if needed.

Setting Touch Panel Mode

The device can detect touches using a finger, a conductive-tip stylus, or a gloved finger. For optimal performance, use a Zebra-certified stylus.

Gloves types include medical latex, leather, cotton, or wool. Some gloves support (and do not support) a device's touchscreen. Make sure to review the type of gloves that each device supports.

Setting Touch Panel Mode - TC53e and TC53e-RFID

Applies to TC53e/TC53e-RFID WLAN devices only.

Types of gloves supported:

- Lightweight nylon gloves (nylon with lycra, black microform coated with palm and fingertips)
- Latex and nitrile gloves
- Knit nylon gloves with nitrile coating

To select a touch panel setting:

1. Go to **Settings**.
2. Touch **Display** > **Touch panel mode**.
3. Select:
   - **Glove and Finger (Screen Protector OFF)** to use a finger or a gloved finger on the screen without a screen protector.
   - **Finger Only** to use a finger of the screen (default)

Setting Touch Panel Mode - TC58e

Applies to TC58e WWAN devices only.

Types of gloves supported:

- Lightweight nylon gloves (nylon with lycra, black microform coated with palm and fingertips)
- Leather work gloves (cowhide leather)
- Latex and nitrile gloves
- Knit nylon gloves with nitrile coating
- Knit nylon gloves with polyurethane coating
- Cotton and polyester gloves
- Cowgrain leather fitters work gloves (freezer gloves, leather with cotton-fleece lining)

1. Go to **Settings**.
2. Touch **Display** > **Touch panel mode**.

3. Select:

IMPORTANT: For optimal performance, if you are just using your finger and no gloves, select **Finger Only**.

- **Stylus and Finger (Screen Protector OFF)** to use a finger or a stylus on the screen without a screen protector.
- **Glove and Finger (Screen Protector OFF)** to use a finger or a gloved finger on the screen without a screen protector.
- **Stylus and Finger (Screen Protector ON)** to use a finger or a stylus on the screen with a screen protector.
- **Glove and Finger (Screen Protector ON)** to use a finger or a gloved finger on the screen with a screen protector.
- **Finger Only** to use a finger (no gloves) on the screen (default).

Setting the Date and Time

The date and time are automatically synchronized using a NITZ server when the device is connected to a cellular/wireless network. You are only required to set the time zone or set the date and time if the wireless LAN does not support Network Time Protocol (NTP) or when not connected to a cellular/wireless network.

1. Go to **Settings**.
2. Touch **System** > **Date & time**.
3. Touch **Set time automatically** to disable automatic date and time synchronization.
4. Touch **Set time zone automatically** to disable automatic time zone synchronization.
5. Touch **Date** to select the date in the calendar.
6. Touch **OK**.
7. Touch **Time**.
   a) Touch the circle, drag to the current hour, and release.
   b) Touch the circle, drag to the current minute, and release.
   c) Touch **OK**.
8. Touch **Time zone** to select the current time zone from the list.
9. Touch **Update Interval** to select an interval to synchronize the system time from the network.
10. In **Time format**, turn on the switches for either **Use local default** or **Use 24-hour format**.

General Sound Setting

Press the volume buttons on the device to display on-screen volume controls.

Use the Sound settings to configure media and alarm volumes.

1. Go to **Settings**.
2. Touch **Sound & Vibration**.
3. Touch an option to set sounds.

Sound Options

- **Media volume** - Controls the music, games, and media volume.
- **Call volume** - Controls the volume during a call.
- **Ring & notification volume** - Controls the ringtone and notification volume.
- **Alarm volume** - Controls the alarm clock volume.
- **Do Not Disturb** - Mutes some or all sounds and vibrations.
- **Phone ringtone** - Select a sound to play when the phone rings.
- **Live Caption** - Detects speech on your device and automatically generates captions.
- **Media** - Shows the media player in Quick Settings while sound is playing, allowing quick access.
- **Vibration & haptics** - Enable or disable vibration and/or haptic settings.
- **Shortcut to prevent ringing** - Turn off the switch to prevent the device from vibrating when a call is received (default - enabled).
- **Default notification sound** - Select a sound to play for all system notifications.
- **Default alarm sound** - Select a sound to play for alarms.
- **Dial pad tones** - Play a sound when pressing keys on dial pad (default - disabled).
- **Screen locking sounds** - Play a sound when locking and unlocking the screen (default – enabled).
- **Charging sounds and vibration** - Play a sound and vibrate when power is applied to the device (default - enabled).
- **Touch sounds** - Play a sound when making screen selections (default – enabled).
- **Touch vibration** - Vibrate the device when making screen selections (default – enabled).
- **Always show icon when in vibrate mode** - Turn on the switch to show the icon when in vibrate mode (default - disabled)

Zebra Volume Controls

In addition to the default sound settings, Zebra Volume Controls display when the volume buttons are pressed.

Zebra Volume Controls are configured using Audio Volume UI Manager (AudioVolUIMgr). Administrators can use AudioVolUIMgr to add, delete and replace Audio Profiles, select an Audio Profile to use the device, and modify the default Audio Profile. For information on how to configure Zebra Volume Controls using AudioVolUIMgr, refer to techdocs.zebra.com.

Setting Wake-Up Sources

By default, the device wakes from Sleep mode when the user presses **Power**. The device can be configured to wake when the user presses **PTT** or **Scan** on the left side of the device handle.

1. Go to **Settings**.

2. Touch **Wake-Up Sources**.
   - **LEFT_TRIGGER_2** - PTT button.
   - **RIGHT_TRIGGER_1** - Right scan button.
   - **SCAN** - Left scan button.
3. Select a checkbox.

   The check displays in the checkbox.

Remapping a Button

Buttons on the device can be programmed to perform different functions or as shortcuts to installed apps. For a list of key names and descriptions, go to techdocs.zebra.com/keymappingmgr/.

NOTE: It is not recommended to remap the scan button.

1. Go to **Settings**.
2. Touch **Key Programmer**. A list of programmable buttons displays.
3. Select the button to remap.
4. Touch the **SHORTCUT**, the **KEYS and BUTTONS**, or the **TRIGGER** tabs that list the available functions, applications, and triggers.
5. Touch a function or application shortcut to map to the button.

NOTE: If you select an application shortcut, the application icon appears next to the button on the Key Programmer screen.

Remappable Keys

List of remappable keys.

Figure 8 Key Positions

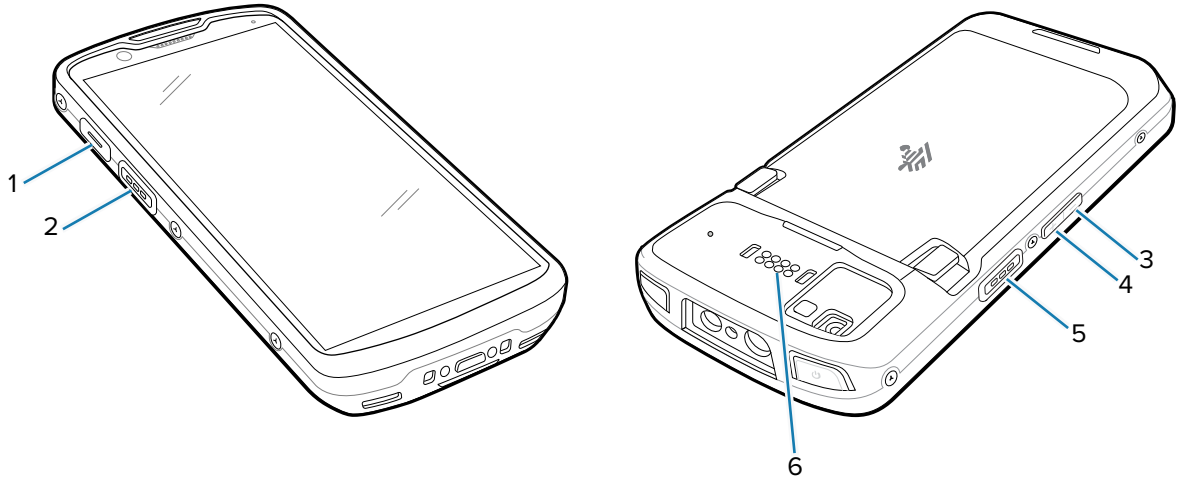

Item	Key	Default Action
1	Programmable Button	None
2	Left scan button	SCAN
3	Programmable Button	None
4	Volume up button	Volume Up
5	Volume down button	Volume Down
6	SYMBOL_TRIGGER_1	I/O for programming accessories

Alert Button

Configure any remappable key on the device as an Alert button using StageNow.

Use an Alert button to launch an app and a command, or call a specified phone number.

Configure the Alert Button

This section provides basic configuration. For detailed information on configuring the Alert button, refer to zebra.techdocs.com/stagenow.

Configure the Alert button through StageNow, using the following Configuration Service Providers (CSPs).

- PowerMgr - Set All Wake-Up Sources to Turn on. This wakes the device if it is in Sleep mode.
- Intent - Create a new setting:
  - Mode - Set to Schedule sending of Intent on key presses.
  - Keep Device Awake - Enable this option to keep the device awake after the short key press.
  - Key Identifier - Select a remappable key. For example, Rear Button.
  - Android Action Name - Enter the action name. For example, to initiate a call, enter android.intent.action.CALL.
  - URI - Enter the URI. For example, to call a phone number, enter tel:123456789.
- KeyMappingMgr - Modify the default behavior of the button. It is recommended to set this to **None**. Otherwise, the button performs its default behavior and sends out an alert.

Using an Alert Button

Activate the Alert button using a long-press of at least one second to prevent accidental alerts.

- If the device is in Sleep mode, perform a short-press on the Alert button, followed by a long-press.

NOTE: Sleep mode conserves battery by dimming or turning off the display and putting the processor in a low-power state. Network connectivity remains active at a reduced capacity to allow for essential functions like receiving calls, messages, and notifications. While most background processes are paused or minimized, exceptions can be set for specific apps.

- If the device is awake, perform a long-press on the Alert button.

Alert Accessibility Service

After the Alert button is configured using StageNow, the Alert Accessibility Service is available on the device.

Go to **Settings** > **Accessibility** > **Alert Accessibility service** to enable or disable the alert button. When the device reboots, Alert Accessibility Service is automatically enabled.

Keyboards

The device provides multiple keyboard options.

NOTE: By default, the Enterprise and Virtual Keyboards are disabled. The Enterprise Keyboard is available for download from the Zebra Support Site.

- Android Keyboard - AOSP devices only
- Gboard - GMS devices only
- Physical Keyboard
- Enterprise Keyboard - Not pre-installed on the device. Contact Zebra Support for more information.

Keyboard Configuration

This section describes configuring the device's keyboard.

Using the Android and Gboard Keyboards

Use the Android or Gboard keyboards to enter text in a text field.

- To configure the keyboard settings, touch and hold "," (comma) and then select **Android keyboard settings**.

Edit Text

Edit entered text and use menu commands to cut, copy, and paste text within or across apps. Some apps do not support editing some or all of the text they display; others may offer their own way to select text.

Entering Numbers, Symbols, and Special Characters

This section describes how to input numbers, symbols, and special characters using the keyboard.

1. Enter numbers and symbols.
   - Touch and hold one of the top-row keys until a menu appears then select a number or special character.
   - Touch the Shift key once for a single capital letter. Touch the Shift key twice to lock in uppercase. Touch the Shift key a third time to unlock Capslock.
   - Touch **?123** to switch to the numbers and symbols keyboard.
   - Touch the **=\<** key on the numbers and symbols keyboard to view additional symbols.

2. Enter special characters.
   - Touch and hold a number or symbol key to open a menu of additional symbols. A larger version of the key displays briefly over the keyboard.

Enterprise Keyboard

The Enterprise Keyboard contains multiple keyboard types.

NOTE: Only available with Mobility DNA Enterprise License.

- Numeric
- Alpha
- Special characters
- Data capture

Numeric Tab

The numeric keyboard is labeled **123**. The keys displayed vary on the app being used. For example, an arrow displays in **Contacts**, however **Done** displays in **Email** account setup.

Alpha Tab

The alpha keyboard is labeled using the language code. For English, the alpha keyboard is labeled **EN**.

Additional Character Tab

The additional characters keyboard is labeled **#*/**.

- Touch ☺ to enter emoji icons in a text message.
- Touch **ABC** to return to the Symbols keyboard.

Scan Tab

The Scan tab provides an easy data capture feature for scanning barcodes.

Language Usage

Use the **Language & input** settings to change the device's language, including words added to the dictionary.

Changing the Language Setting

1. Go to **Settings**.
2. Touch **System** > **Languages & input**.

3. Touch **Languages**.

   A list of available languages displays.

4. If the desired language is not listed, touch **Add a language** and select a language from the list.
5. Touch and hold ☰ to the right of the desired language, then drag it to the top of the list.

   The operating system text changes to the selected language.

Adding Words to the Dictionary

This section describes how to add words to the user dictionary.

1. Go to **Settings**.
2. Touch **System** > **Languages & input** > **Personal dictionary**.

   If prompted, select the language where this word or phrase is stored.

3. Touch **+** to add a new word or phrase.
4. Enter the new word or phrase.
5. (Optional) In the **Shortcut** field, enter a shortcut for the word or phrase.
6. Touch the Back button.

   The new word or phrase displays. Touch the word or phrase to edit.

Notifications

The user can configure notifications for the device and for specific apps. Device notifications settings allow the user to configure how notifications occur. App notification settings allow the user to configure how notifications for a specific app occur.

To view device notification settings, touch **Settings** > **Notifications**.

To view app notifications, touch **Settings** > **Apps** > **All apps**, and then select an app.

Setting App Notifications

Configure the notifications settings for a specific app.

1. Go to **Settings**
2. Touch **Apps** > **All apps**, and then select an app.
3. Touch **Notifications**.

   Options vary depending on the app selected.

4. Touch the switch to turn on or off notifications for this app.
   - **Allow notification dot** - Do not allow this app to add a notification dot to the app icon.
   - **Additional settings in the app** - Open the app settings.

Viewing Notifications

1. Go to **Settings**.

2. Touch **Notifications** > **App Settings**.

   The **App notifications** screen appears.

3. Select **Turned off** to view how many app notifications are turned off.

Controlling Lock Screen Notifications

Control whether notifications can be seen when the device is locked.

1. Go to **Settings**.
2. Touch **Notifications**.
3. Touch **Notifications on lock screen** and select one of the following:
   - **Show conversations, default, and silent** (default)
   - **Hide silent conversations and notifications**
   - **Don't show any notifications**

Enabling Blink Light

The Notification LED lights are blue when an app, such as email and VoIP, generates a programmable notification or to indicate when the device is connected to a Bluetooth device. By default, LED notifications are enabled.

1. Go to **Settings**.
2. Touch **Notifications**.
3. Touch **Blink light** to toggle the notification on or off.

Applications

The Apps screen displays icons for all installed apps. See Application Deployment for information on installing and uninstalling apps. For more information on standard Android apps, go to the Google Play Apps store.

Installed Applications

Aside from the common Google apps, the Zebra-specific apps that are installed on the device are described in this section.

Table 9 Apps

Item	Description
	Battery Manager - Displays battery information (including charge level, status, health, and wear level) and use to place the device in Battery Swap mode when replacing the battery.
	Bluetooth Pairing Utility - Pair a Zebra Bluetooth scanner with the device by scanning a barcode.
	Camera - Take photos or record videos.
	DataWedge - Enables data capture.
	DisplayLink Presenter - Use to present the device screen onto a connected monitor.
	DWDemo - Provides a way to demonstrate the data capture features.

Table 9 Apps (Continued)

Item	Description
	License Manager - Use to manage software licenses on the device.
	RxLogger - Use to diagnose device and app issues.
	StageNow - Allows the device to stage a device for initial use by initiating the deployment of settings, firmware, and software.
	VoD - The Video on Device basic app provides a how-to video for proper device cleaning. For Video on Device licensing information, go to learning.zebra.com.
	Wireless Analyzer - A diagnostic intelligent app. Diagnose the surrounding areas and display network stats, such as coverage hole detection or AP in the vicinity. Refer to the Wireles Analyzer Administrator Guide for Android. Only available with Mobility DNA Enterprise License.
	Zebra Bluetooth Settings - Use to configure Bluetooth logging.
	Zebra Data Services - Use to enable or disable Zebra Data Services. Some options are set by the system administrator.
	Zebra Showcase - Provides a way to experience and learn about Zebra's new or existing capabilities.

Accessing Apps

Access all apps installed on the device using the APPS window.

1. On the Home screen, swipe up from the bottom of the screen.
2. Slide the **APPS** window up or down to view more app icons.
3. Touch an icon to open the app.

Switching Between Recent Apps

1. Touch **Recent**.

   The app screens display. If there are no recently used app screens, it displays **No recent items**.
2. Slide left and right to view all used apps.
3. Swipe up to remove the app from the list and force close the app.

4. Tap an app screen to go back to the app's session.

Battery Manager

The Battery Manager provides detailed information about the battery.

To open the Battery Manager app, swipe up from the bottom of the Home screen, and then touch .

Battery Manager Information Tab

The Battery Manager displays detailed information about battery charging, health, and status.

Table 10 Battery Icons

Battery Icon	Description
	Battery charge level is between 85% and 100%.
	Battery charge level is between 19% and 84%.
	Battery charge level is between 0% and 18%.

- **Level** - The current battery charge level as a percentage. Displays -% when the level is unknown.
- **Wear** - The health of the battery in graphical form. When the wear level exceeds 80%, the bar color changes to red.
- **Health** - The health of the battery. If a critical error occurs, appears. Touch to view the error description.
  - **Decommission** - The battery is past its useful life and should be replaced. Contact the system administrator.
  - **Good** - The battery is good.
  - **Charge error** - An error occurred while charging. Contact the system administrator.
  - **Over Current** - An over-current condition occurred. Contact the system administrator.
  - **Dead** - The battery has no charge. Replace the battery.
  - **Over Voltage** - An over-voltage condition occurred. Contact the system administrator.
  - **Below Temperature** - The battery temperature is below the operating temperature. Contact the system administrator.
  - **Failure Detected** - A failure has been detected in the battery. Contact the system administrator.
  - **Unknown** - Contact the system administrator.

- **Charge Status**
  - **Not charging** - The device is not connected to AC power.
  - **Not charging** - The device is not charging.
  - **Charging-AC** - The device is connected to AC power and charging or is fast charging via USB.
  - **Charging-USB** - The device is connected to a host computer with a USB cable and charging.
  - **Discharging** - The battery is discharging.
  - **Full** - The battery is fully charged.
  - **Unknown** - The battery status is unknown.
- **Time until Full** - The amount of time until the battery is fully charged.
- **Time since charging** - The amount of time since the device began charging.
- **Time until empty** - The amount of time until the battery is empty.
- **Advanced info** - Touch to view additional battery information.
- **Battery present status** - Indicates that the battery is present.
- **Battery level** - The battery charge level as a percentage of scale.
- **Battery scale** - The battery scale level used to determine battery level (100).
- **Battery voltage** - The current battery voltage in millivolts.
- **Battery temperature** - The current battery temperature in degrees Centigrade.
- **Battery technology** - The type of battery.
- **Battery current** - The average current into or out of the battery over the last second in mAh.
- **Battery manufacture date** - The date of manufacture.
- **Battery serial number** - The battery serial number. The number matches the serial number printed on the battery label.
- **Battery part number** - The battery part number.
- **Battery rated capacity** - Lists the rated capacity of the backup battery in mAh.
- **Battery decommission status** - Indicates if the battery is past its life span.
  - **Battery Good** - The battery is in good health.
  - **Decommissioned Battery** - The battery is past its useful life and should be replaced.
- **Base cumulative charge** - Cumulative charge using Zebra charging equipment only.
- **Battery present capacity** - Maximum amount of charge that could be pulled from the battery under the present discharge conditions if the battery were fully charged.
- **Battery health percentage** - With a range from 0 to 100, this is the ratio of “present_capacity” to “design_capacity” at a discharge rate of “design_capacity”.
- **% decommission threshold** - The default % decommission threshold for a gifted battery as 80%.
- **Battery present charge** - Amount of usable charge remaining in the battery at present under the current discharge conditions.
- **Battery total cumulative charge** - The total accumulated charge in all chargers.
- **Battery time since first use** - The time passed since the battery was placed in a Zebra terminal for the first time.

- **Battery error status** - The error status of the battery.
- **Battery usage number** - The health of the battery as a result of charging and discharging. A high number indicates low battery health.
- **Usage decommission threshold** - When the Battery usage number is greater than or equal to the Usage decommission threshold, the battery is past its useful life and should be replaced.
- **App version** - The application version number.

Camera

This section provides information for taking photos and recording videos using the integrated digital cameras.

NOTE: If a microSD card is installed, photos and videos are saved on the card, and the storage path is manually changed. By default, or if the microSD card is not installed, the devices saves photos and videos on internal storage.

Taking Photos

This section describes how to use the photo feature on the Camera app.

NOTE: See Camera and Video Settings for setting descriptions.

1. Swipe up from the bottom of the Home screen and touch **Camera** . Photo mode is the standard mode that displays.

1	Flash
2	Camera Quick Settings
3	Camera App Settings
4	Zoom
5	Photo mode
6	Shutter button
7	Rear/front cameras
8	Thumbnail
9	Video mode

2. To switch between the rear camera and front camera (if available), touch .
3. Frame the subject on the screen.
4. Touch an area on the screen to focus. The yellow focus box displays and places that area into focus. Alternatively, **AutoFocus Animation** can be enabled in **Settings**, and the yellow focus box automatically appears when in focus.
5. To turn the Flash on, touch , which can also be accessed via Quick Settings Menu.

6. To zoom in or out, the following options are available:
   - Tap **1.0x** zoom to toggle between **1.0x** and **2.0x**.
   - Press and hold the **1.0x** zoom icon until the zoom slider displays. Slide the slider to the desired zoom.
   - Touch and hold an area with two fingers, then spread them apart to zoom in or pinch them together to zoom out.
7. Touch ● to take a photo. A shutter sound emits.

Recording Videos

This section describes how to use the video feature on the Camera app.

NOTE: See Camera and Video Settings for setting descriptions.

1. Swipe up from the bottom of the Home screen and touch **Camera**.
2. Touch **Video**.

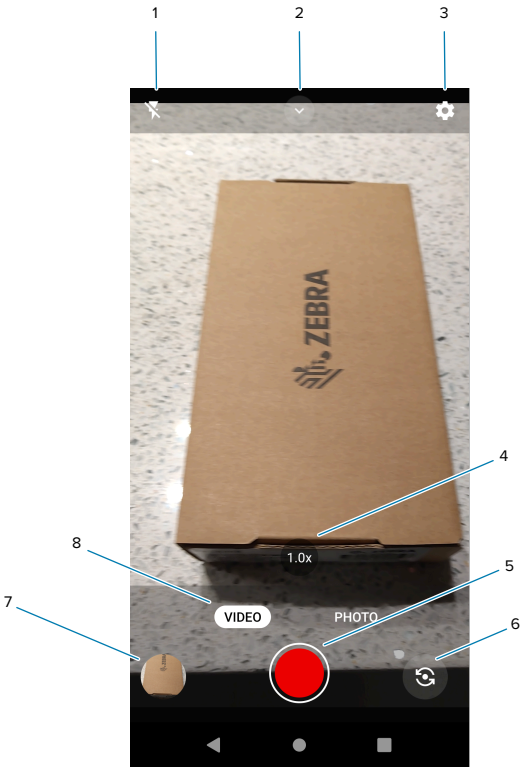

1	Flash
2	Video Quick Settings
3	Camera/Video App Settings
4	Zoom
5	Start/stop recording button

6	Rear/front cameras
7	Thumbnail
8	Video mode

3. To switch between the rear camera and front camera, touch ⊙.
4. Point the camera and frame the scene.
5. Touch an area on the screen to focus. The yellow focus box displays and places that area into focus. Alternatively, **AutoFocus Animation** can be enabled in **Settings**, and the yellow focus box automatically appears when in focus.
6. To turn the Flash on, touch the ϟ icon, which can also be accessed via the Quick Settings Menu.
7. To zoom in or out, the following options are available:
   - Tap **1.0x** zoom to toggle between **1.0x** and **2.0x**.
   - Press and hold the **1.0x** zoom icon until the zoom slider displays. Slide the slider to the desired zoom.
8. Touch **Record** (Start). The video timer displays at the top of the screen.

1	Video timer
2	Zoom

3	Start/stop recording button
4	Still image capture button (during video recording)
5	Pause recording button
6	Thumbnail

9. Touch **Record** (Stop) to end the recording.

Quick Camera Photo and Video Mode Settings

This section describes the Camera app quick settings.

In Photo mode, touch to display the setting options.

- **Flash** - Compensates for the lack of brightness when shooting in dimly lit environments. Select **Auto** (default), **On**, or **Off**.
- **Timer** - Set a delay between taking a photo. Select **Off** (default), **3 seconds**, or **10 seconds**.
- **White Balance** - Select how the camera adjusts colors in different kinds of light. Select **Auto** (default), **Incandescent**, or **Fluorescent**
- **Pro Mode** - Turn on for easy access to ISO, exposure, white balance, and focus advanced settings.

In Video mode, touch to display the setting options.

- **Flash** - Compensates for the lack of brightness when shooting in dimly lit environments. Select **Auto**, **On**, or **Off** (default).
- **Resolution** - Number of pixels in each frame. Select **HD 1080p** (default), **HD 720p**, or **SD 480p**.
- **Audio** - Enable (default) or disable the audio.
- **White Balance** - Select how the camera adjusts colors in different kinds of light. Select **Auto** (default), **Incandescent**, or **Fluorescent**.

NOTE: Go to Camera and Video Settings for more setting descriptions.

Camera and Video Settings

In Photo or Video mode, camera settings are displayed on the screen by touching ⚙ on the top right.

- **General** - These settings apply to both the still camera and video.
  - **Camera Sounds** - Enable (default) or disable camera sounds.
  - **Location Tags** - Enable location information when pictures and videos are taken.
  - **Storage** - Photos and videos are stored on the phone.
  - **Dirty Lens Detection** - Enable to receive alerts when the camera lens is dirty.
  - **QR Code Mode** - Enable QR Code scanning with an option to open URLs via the browser (Rear camera and video only).
  - **Google Lens Mode** - Enable Google-developed recognition technology that displays relevant information about identified objects within an image.
  - **Digital Level** - Enable digital guide to keep photos aligned.
  - **Face Detection** - Enable to turn on (or off).
  - **Gestures** - View gestures and power user controls. Gestures include **Swipe Down**, **Swipe Up**, **Side Swipe**, **Tap**, **Tap + Hold**, **Double Tap**, and **Hold Zoom**.
- **Still Camera** - These settings only apply to the still camera.
  - **Photo Grid** - Enable to apply a 3x3 grid guide to the camera viewport.
  - **Countdown timer** - Select **Off** (default), **3 seconds**, or **10 seconds**.
  - **Selfie Mirror** - Enable to save a mirror image of the photo (Front camera and video only).
  - **Picture size** - Set the size (in pixels) of the photo to **16M pixel** (default for rear camera/video), **8M pixels** (default for front camera/video), **5M pixels**, **WVGA**, **VGA**, or **QVGA**.
  - **Picture quality** - Set setting to **Low**, **Standard**, or **High** (default).
  - **Selfie Flash** - Enable to turn on the front-facing flash (Front camera and video only).
  - **Picture Format** - All still images are saved in **JPEG** (default) or **RAW + JPEG** format.
  - **MFNR** - Disabled (default) Multi-frame Noise Reduction improves picture quality in low-light conditions.
  - **AutoFocus Animation** - Enable the camera focus ring in the camera preview (Rear camera and video only).
- **Video Camera** - These settings only apply to the video camera.
  - **Video quality** - Set the video quality to **HD 1080p** (default), **HD 720p**, **SD 480p**, **VGA** , **CIF**, or **QVGA**
  - **Video duration** - Set to **30 seconds (MMS)**, **10 minutes** (default), **30 minutes**, or **no limit**.
  - **Noise Reduction** - Set to **Off**, **Fast**, or **High Quality** (default).
  - **HEVC Encoder** - Enable to save video recording using a high-efficiency video encoder for a smaller file size.
  - **Audio Encoder** - Set the audio encoder to **AMRNB** or **AAC** (default).
  - **Video Rotation** - Set the rotation to **0** (default), **90** ,**180**, or **270**.

- **System**
  - **Restore defaults** - Select to restore all settings to the default values.
  - **About** - Displays the software version of the camera app.

DWDemo

Use DataWedge Demonstration (DWDemo) to demonstrate data capture functionality. To configure DataWedge, go to techdocs.zebra.com/dwdemo/.

NOTE: DataWedge is enabled on the Home screen. To disable this feature, go to the DataWedge settings and disable the **Launcher** profile.

DWDemo Icons

This table lists the icons available on the DWDemo app.

Table 11 DWDemo Icons

Category	Icon	Description
Illumination		Imager illumination is on. Touch to turn illumination off.
Illumination		Imager illumination is off. Touch to turn illumination on.
Data capture		The data capture function is through the internal imager.
Data capture		A Bluetooth scanner is connected.
Data capture		A Bluetooth scanner is not connected.
Scan mode		Imager is in picklist mode. Touch to change to normal scan mode.
Scan mode		Imager is in normal scan mode. Touch to change to picklist mode.
Menu		Opens a menu to view the application information or to set the application DataWedge profile.

Selecting a Scanner

This section describes how to select a scanner in DWDemo.

NOTE: See Data Capture for more information.

1. To select a scanner, touch ⋮ > **Settings** > **Scanner Selection**.

2. Press the programmable button or touch the yellow scan button to capture data.

   The data appears in the text field below the yellow button.

RxLogger

RxLogger is a comprehensive diagnostic tool that provides application and system metrics, and diagnoses device and application issues.

RxLogger logs the following information: CPU load, memory load, memory snapshots, battery consumption, power states, wireless logging, cellular logging, TCP dumps, Bluetooth logging, GPS logging, logcat, FTP push/pull, ANR dumps, etc. All generated logs and files are saved onto flash storage on the device (internal or external).

RxLogger logs the following information: CPU load, memory load, memory snapshots, battery consumption, power states, wireless logging, TCP dumps, Bluetooth logging, logcat, FTP push/pull, ANR dumps, etc. All generated logs and files are saved onto flash storage on the device (internal or external).

RxLogger Configuration

RxLogger is built with an extensible plug-in architecture and comes packaged with a number of plug-ins already built-in. For information on configuring RxLogger, refer to techdocs.zebra.com/rxlogger/.

To open the configuration screen, from the RxLogger home screen, touch **Settings**.

Configuration File

All RxLogger settings are stored in a file on the device, permitting remote configuration and mass deployment of setting files using an enterprise mobile management (EMM) system.

IMPORTANT: The RxLogger configuration file is human-readable; however, it should not be edited by hand as doing so can lead to unpredictable behavior. Zebra recommends modifying RxLogger settings only through the RxLogger UI.

- File name: `config.json`
- Location: `/<internal_storage>/RxLogger`
- With external SD Card: `/storage/sdcard1/RxLogger`
- With no external SD Card: `/storage/sdcard0/RxLogger` When a new settings file is pushed to the device, RxLogger restarts all affected modules and applies the new settings immediately.

Copy the file from the device to a host computer using a USB connection. Edit the configuration file through the RxLogger UI and then replace the JSON file on the device. There is no need to stop and restart the RxLogger service because the file change is automatically detected.

Enabling Logging

1. Swipe the screen up and select .
2. Touch **Start**.

Disabling Logging

1. Swipe the screen up and select .

2. Touch **Stop**.

Extracting Log Files

1. Connect the device to a host computer using a USB connection.
2. Using a file explorer, navigate to the RxLogger folder.
3. Copy the file from the device to the host computer.
4. Disconnect the device from the host computer.

Backing Up Data

RxLogger Utility allows the user to make a zip file of the RxLogger folder in the device, which by default contains all the RxLogger logs stored in the device.

- To save the backup data, touch ⋮ > **BackupNow**.

RxLogger Utility

RxLogger Utility is a data monitoring application for viewing logs in the device while RxLogger is running. Logs and RxLogger Utility features are accessed using Main Chat Head.

Initiating the Main Chat Head

1. Open **RxLogger**.
2. Touch ⋮ > **Toggle Chat Head**.

   The Main Chat Head icon appears on the screen.
3. Touch and drag the Main Chat Head icon to move it around the screen.

Removing the Main Chat Head

1. Touch and drag the icon.

   A circle with an X appears.
2. Move the icon over the circle and then release.

Viewing Logs

1. Touch the Main Chat Head icon.

   The RxLogger Utility screen displays.
2. Touch a log to open it.

   Open many logs with each displaying a new Sub Chat Head.
3. If necessary, scroll left or right to view additional Sub Chat Head icons.
4. Touch a Sub Chat Head to display the log contents.

Removing a Sub Chat Head Icon

- To remove a Sub Chat Head icon, press and hold the icon until it disappears.

Backing Up In Overlay View

RxLogger Utility allows the user to make a zip file of the RxLogger folder in the device, which by default contains all the RxLogger logs stored in the device.

The Backup icon is always available in Overlay View.

1. Touch .

   The Backup dialog box appears.

2. Touch **Yes** to create the backup.

Data Capture

This section provides information for capturing barcode data using various scanning options.

The device supports data capture using:

- Integrated SE55 imager
- Integrated SE4720 imager
- Integrated SE4770 imager
- Integrated camera
- RS507/RS507x Bluetooth Ring Scanner
- RS5100 Bluetooth Ring Scanner
- RS6000 Bluetooth Ring Scanner
- RS6100 Bluetooth Ring Scanner
- DS3678 Digital Scanner
- DS2278 Digital Scanner
- DS8178 Digital Scanner
- LI3678 Linear Scanner

Imaging

The device with an integrated 2D imager has the following features:

- Omnidirectional reading of a variety of barcode symbologies, including the most popular linear, postal, PDF417, Digimarc, and 2D matrix code types.
- The ability to capture and download images to a host for a variety of imaging applications.
- Advanced intuitive laser aiming cross-hair and dot aiming for easy point-and-shoot operation.

The imager uses imaging technology to take a picture of a barcode, stores the resulting image in memory, and executes state-of-the-art software decoding algorithms to extract the barcode data from the image.

Digital Camera

The device with an integrated camera-based barcode scanning solution has the following functions:

- Omnidirectional reading of a variety of barcode symbologies, including the most popular linear, postal, QR, PDF417, and 2D matrix code types.
- Cross-hair reticle for easy point-and-shoot operation.
- Picklist mode to decode a particular barcode from many in the field of view.

The solution uses the advanced camera technology to take a digital picture of a barcode, and executes state-of-the-art software decoding algorithms to extract the data from the image.

Operational Modes

The device with an integrated imager supports three modes of operation.

Activate each mode by pressing **Scan**.

- Decode mode — The device attempts to locate and decode enabled barcodes within its field of view. The imager remains in this mode as long as you hold the scan button, or until it decodes a barcode.

NOTE: To enable Picklist Mode, configure in DataWedge or set in an application using an API command.

- Picklist mode — Selectively decode a barcode when more than one barcode is in the device's field of view by moving the aiming crosshair or dot over the required barcode. Use this feature for pick lists containing multiple barcodes and manufacturing or transport labels containing more than one barcode type (either 1D or 2D).

NOTE: To enable MultiBarcode Mode, configure in DataWedge or set in an application using an API command.

- MultiBarcode Mode — In this mode, the device attempts to locate and decode a specific number of unique barcodes within its field of view. The device remains in this mode as long as you hold the scan button, or until it decodes all the barcodes.
    - The device attempts to scan the programmed number of unique barcodes (from 2 through 100). This may be a fixed amount, meaning it scans X unique barcodes, or can be set as a range to scan a different number of unique barcodes each session.
    - If there are duplicate barcodes (same symbology type and data), only one of the duplicate barcodes is decoded and the remainder are ignored. If the label has two duplicate barcodes plus another two different barcodes, a maximum of three barcodes will be decoded from that label; one will be ignored as a duplicate.
    - Barcodes can be of multiple symbology types and still be acquired together. For example, if the specified quantity for a MultiBarcode Mode scan is four, two barcodes can be symbology type Code 128 and the other two can be symbology type Code 39.
    - If the specified number of unique barcodes is not initially in view of the device, the device will not decode any data until the device is moved to capture the additional barcode(s) or time out occurs. If the device field of view contains a number of barcodes greater than the specified quantity, the device randomly decodes barcode(s) until the specified number of unique barcodes is reached. For example, if the count is set to two and eight barcodes are in the field of view, the device decodes the first two unique barcodes it sees, returning the data in random order.
    - MultiBarcode Mode does not support concatenated barcodes.

Scanning Considerations

Typically, scanning is a simple matter of aim, scan, and decode, with a few quick trial efforts to master it.

However, consider the following to optimize scanning performance:

- Range — Scanners decode optimally over a particular working range — minimum and maximum distances from the barcode. This range varies according to barcode density and scanning device optics. Scan within range for quick and constant decodes; scanning too close or too far away prevents decodes. Move the scanner closer and further away to find the right working range for the barcodes being scanned.
- Angle — Scanning angle is important for quick decodes. When the illumination/flash reflects directly back into the imager, the specular reflection can blind/saturate the imager. To avoid this, scan the barcode so that the beam does not bounce directly back. Do not scan at too sharp an angle; the scanner needs to collect scattered reflections from the scan to make a successful decode. Practice quickly shows what tolerances to work within.
- Hold the device farther away for larger symbols.
- Move the device closer for symbols with bars that are close together.

NOTE: Scanning procedures depend on the app and device configuration. An app may use different scanning procedures from the one listed above.

Scanning with Internal Imager

Use the internal imager to capture barcode data.

To read a barcode or QR code, a scan-enabled application is required. The device contains the DataWedge Demonstration (DWDemo) app, which allows you to enable the imager, decode the barcode/QR code data, and display barcode content.

NOTE: The SE55 displays a green dash-dot-dash aimer. The SE4720 displays a red dot aimer. The SE4770 displays a red crosshair aimer.

1. Ensure that an application is open on the device and a text field is in focus (text cursor in text field).
2. Point the exit window on the top of the device at a barcode or QR code.

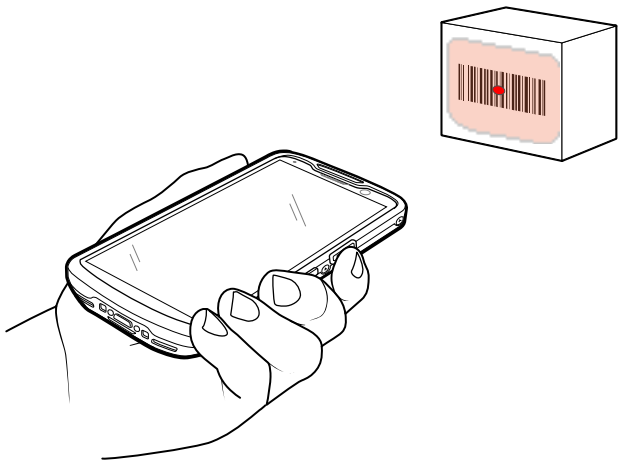

3. Press and hold the scan button.

   The device projects the aiming pattern.

4. Ensure the barcode or QR code is within the area formed in the aiming pattern.

Table 12 Aiming Patterns

SE55	SE4720	SE4770

Table 13 Aiming Patterns in Picklist Mode with Multiple Barcodes

SE55	SE4720	SE4770
	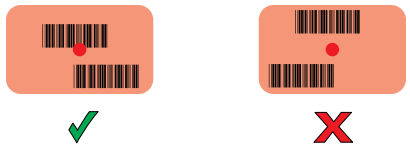	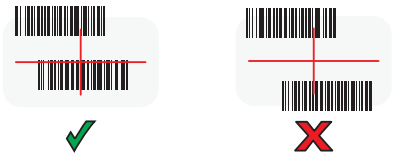

NOTE: When the device is in Picklist mode, it does not decode the barcode/QR code until the center of the crosshair touches the barcode/QR code.

The Data Capture LED light turns green (red for the SE4720), and the device beeps, by default, to indicate that the barcode or QR code was decoded successfully.

5. Release the scan button.

   The device displays the barcode or QR code data in the text field.

Scanning with Internal Camera

Use the internal camera to capture barcode data.

NOTE: To read a barcode, a scan-enabled app is required. The device contains the DataWedge app that allows the user to enable the scanner to decode barcode data and display the barcode content.

NOTE: The integrated camera is intended for light-duty barcode scanning. For heavy-duty scanning, 100 or more scans per day, use the 2D imager.

When capturing barcode data in poor lighting, turn on Illumination mode in the DataWedge application.

To scan with the internal camera:

1. Ensure an app is open on the device and a text field is focused (text cursor in the text field).

2. Point the camera at a barcode.

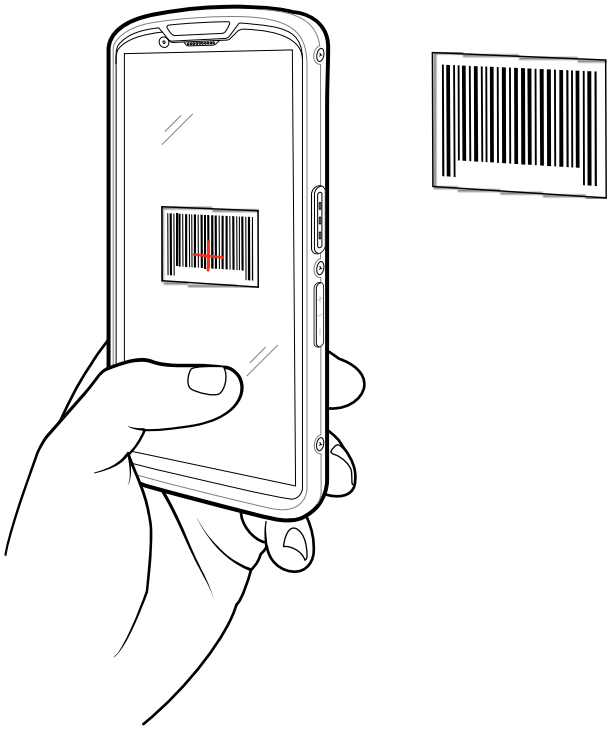

NOTE: When Picklist mode is enabled, move the device until the barcode is centered under the red target on the screen.

3. Move the device until the barcode is visible on the screen.

   The Decode LED light turns green, a beep sounds, and the device vibrates, by default, to indicate the barcode was decoded successfully.

   The captured data appears in the text field.

Scanning with Integrated RFID

Use the TC53e-RFID to capture RFID tags.

NOTE: Install the 123RFID Mobile app for Android for the device's tag operation functionality. Available on the Google Play store. For more information on installing the 123RFID Mobile app, go to the Zebra 123RFID Mobile Support page.

The TC53e-RFID features a built-in encoder/reader, including:

- RFID tag read range of 1.5 - 2.0 m.
- RFID read speed of 20 tags per second.
- An omnidirectional antenna.

1. Ensure that the 123RFID Mobile app is installed.
2. Point the device at the tags. The distance between the tag and antenna is the approximate read range. Ensure that your hand is below the hand strap (towel) bar and the scan buttons The following image is the scanning orientation of the integrated RFID.

3. Tap the on-screen Read command within the app to interrogate all RFID tags with the RF field of view and capture data from each new tag found.

RFID Scanning Considerations

The following hand grips are recommended to ensure the RFID function works properly.

Optimal Hand Grips

IMPORTANT: When holding the device, ensure that your hand is below the hand strap (towel) bar and the scan buttons.

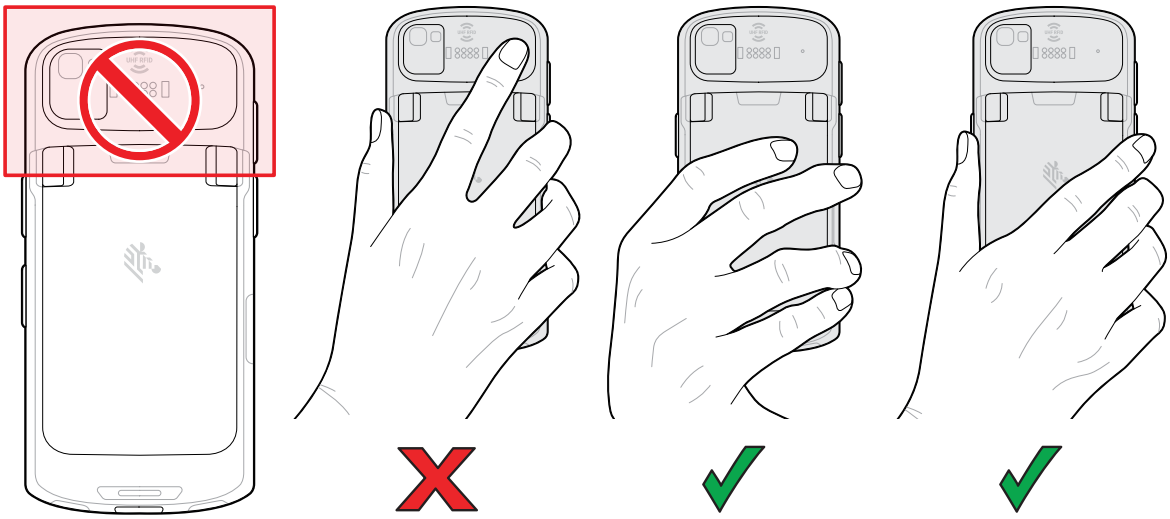

Scanning with the RS507/RS507X Hands-Free Imager

Use the RS507/RS507X Hands-Free Imager to capture barcode data.

Figure 9 RS507/RS507X Hands-Free Imager

Refer to the RS507/RS507X Hands-free Imager Product Reference Guide for more information.

NOTE: To read a barcode, a scan-enabled app is required. The device contains the DataWedge app that allows the user to enable the scanner to decode barcode data and display the barcode content.

To scan with the RS507/RS507x:

1. Pair the RS507/RS507X with the device.
2. Ensure that an app is open on the device and a text field is in focus (text cursor in text field).
3. Point the RS507/RS507X at a barcode.

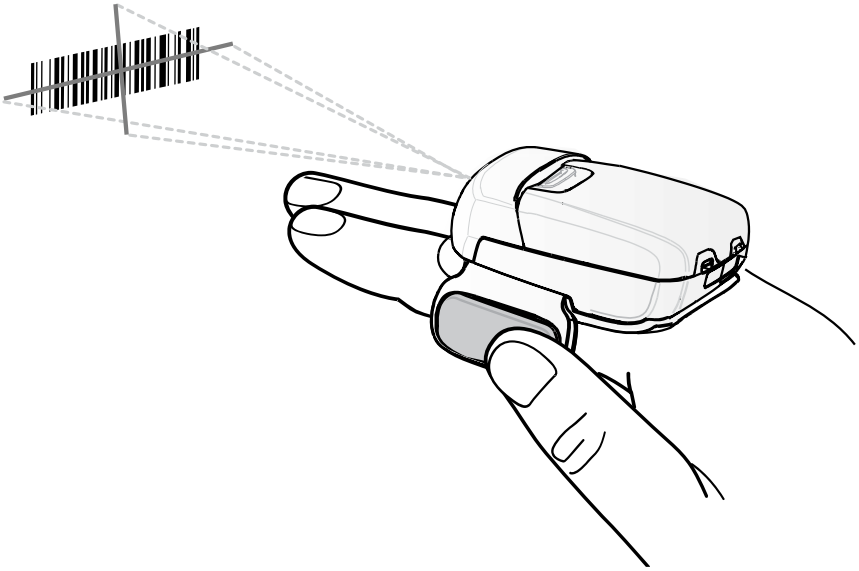

4. Press and hold the trigger.

   The red laser aiming pattern turns on to assist in aiming. Ensure the barcode is within the area formed by the cross-hairs in the aiming pattern. The aiming dot increases visibility in bright lighting conditions.

   Figure 10 RS507/RS507X Aiming Pattern

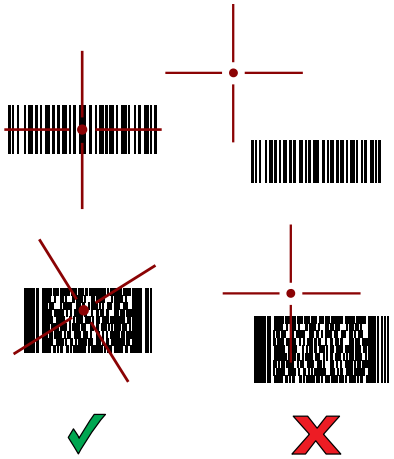

   When the RS507/RS507X is in Pick List mode, the RS507/RS507X does not decode the barcode until the center of the crosshair touches the barcode.

   Figure 11 RS507/RS507X Pick List Mode with Multiple Barcodes in Aiming Pattern

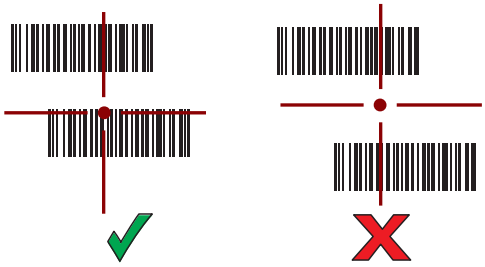

   The RS507/RS507X LEDs light green and a beep sounds to indicate the barcode was decoded successfully.

   The captured data appears in the text field.

Scanning with the RS5100 Ring Scanner

Use the RS5100 Ring Scanner to capture barcode data.

Figure 12 RS5100 Ring Scanner

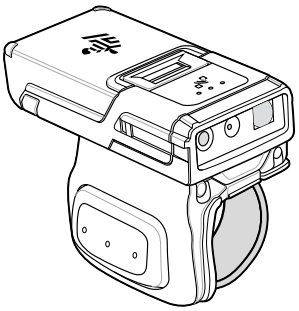

Refer to the RS5100 Ring Scanner Product Reference Guide for more information.

NOTE: To read a barcode, a scan-enabled app is required. The device contains the DataWedge app that allows the user to enable the scanner to decode barcode data and display the barcode content.

To scan with the RS5100:

1. Pair the RS5100 with the device.
2. Ensure that an app is open on the device and a text field is in focus (text cursor in text field).
3. Point the RS5100 at a barcode.

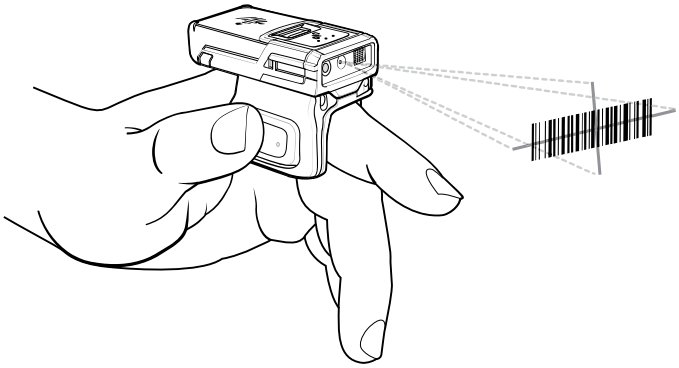

4. Press and hold the trigger.

   The red laser aiming pattern turns on to assist in aiming. Ensure the barcode is within the area formed by the cross-hairs in the aiming pattern. The aiming dot increases visibility in bright lighting conditions.

   Figure 13 RS5100 Aiming Pattern

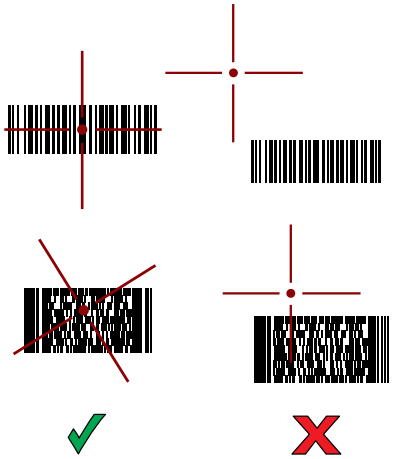

   When the RS5100 is in Pick List mode, the RS5100 does not decode the barcode until the center of the crosshair touches the barcode.

   Figure 14 RS5100 Pick List Mode with Multiple Barcodes in Aiming Pattern

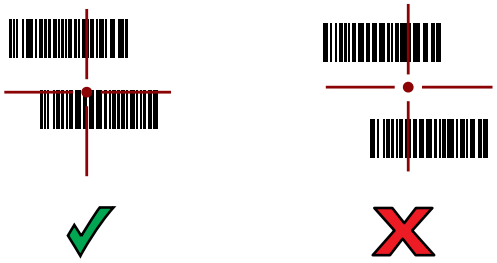

   The RS5100 LEDs light green and a beep sounds to indicate the barcode was decoded successfully.

   The captured data appears in the text field.

Scanning with the RS6000 Bluetooth Ring Scanner

Use the RS6000 Bluetooth Ring Scanner to capture barcode data.

Figure 15 RS6000 Bluetooth Ring Scanner

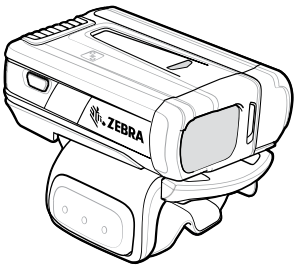

Refer to the RS6000 Bluetooth Ring Scanner Product Reference Guide for more information.

NOTE: To read a barcode, a scan-enabled app is required. The device contains the DataWedge app that enables the user to use the scanner to decode barcode data and display the barcode content.

To scan with the RS6000:

1. Pair the RS6000 with the device.
2. Ensure that an app is open on the device and a text field is in focus (text cursor in text field).
3. Point the RS6000 at a barcode.

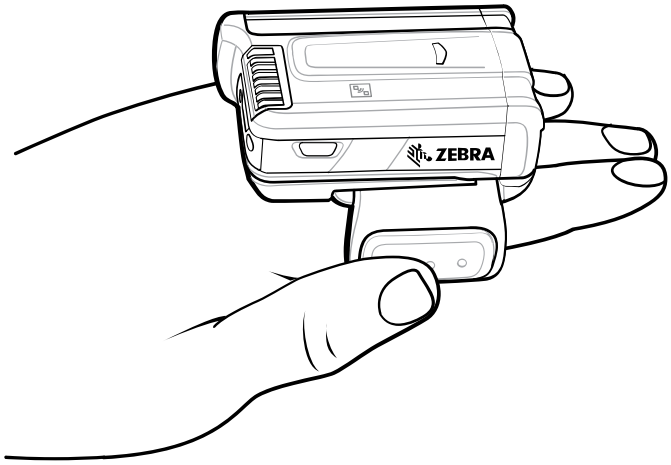

4. Press and hold the trigger.

   The red laser aiming pattern turns on to assist in aiming. Ensure the barcode is within the area formed by the cross-hairs in the aiming pattern. The aiming dot increases visibility in bright lighting conditions.

   Figure 16 RS6000 Aiming Pattern

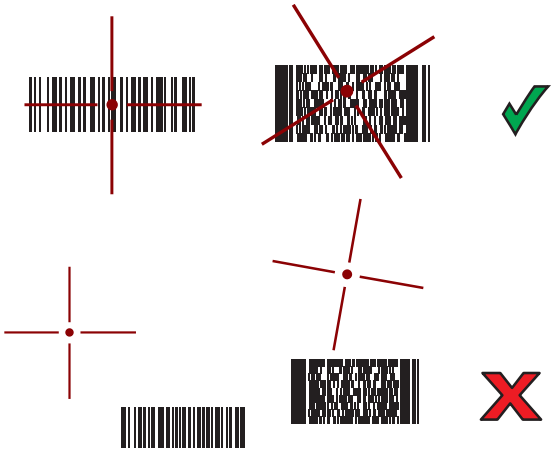

   When the RS6000 is in Pick List mode, the RS6000 does not decode the barcode until the center of the crosshair touches the barcode.

   Figure 17 RS6000 Pick List Mode with Multiple Barcodes in Aiming Pattern

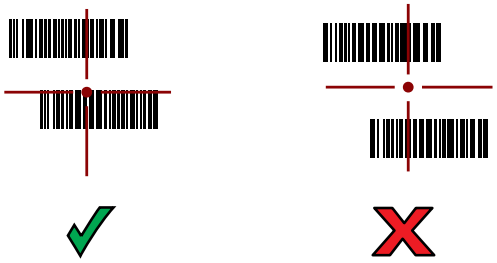

   The RS6000 LEDs light green and a beep sounds to indicate the barcode was decoded successfully.

   The captured data appears in the text field.

Scanning with the RS6100 Bluetooth Ring Scanner

Use the RS6100 Bluetooth Ring Scanner to capture barcode data.

Figure 18 RS6100 Bluetooth Ring Scanner

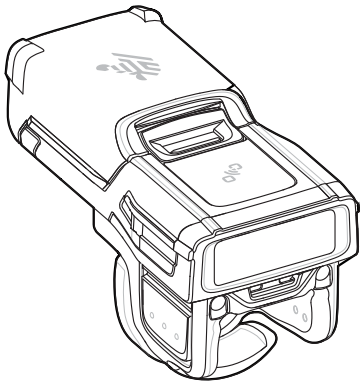

Refer to the RS6100 Bluetooth Ring Scanner Product Reference Guide for more information.

NOTE: To read a barcode, a scan-enabled app is required. The device contains the DataWedge app that allows the user to enable the scanner to decode barcode data and display the barcode content.

To scan with the RS6100:

1. Pair the RS6100 with the device.
2. Ensure that an app is open on the device and that a text field is in focus (text cursor in text field).
3. Point the RS6100 at a barcode.

4. Press and hold the trigger.

   The green laser aiming pattern turns on to assist in aiming. Ensure the barcode is within the area formed by the cross-hairs in the aiming pattern. The aiming dot increases visibility in bright lighting conditions.

   Figure 19 RS6100 Aiming Pattern

   When the RS6100 is in Pick List mode, the RS6100 does not decode the barcode until the center of the crosshair touches the barcode.

   Figure 20 RS6000 Pick List Mode with Multiple Barcodes in Aiming Pattern

   The RS6100 LEDs light green and a beep sounds to indicate the barcode was decoded successfully.

   The captured data appears in the text field.

Scanning with the DS3678 Bluetooth Scanner

Use the DS3678 Bluetooth Scanner to capture barcode data.

Figure 21 DS3678 Digital Scanner

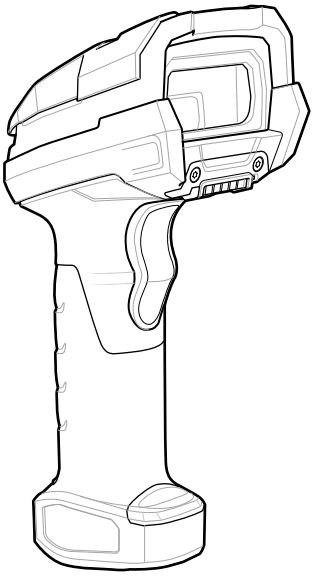

Refer to the DS3678 Product Reference Guide for more information.

NOTE: To read a barcode, a scan-enabled app is required. The device contains the DataWedge app that allows the user to enable the scanner to decode barcode data and display the barcode content.

To scan with the DS3678 scanner:

1. Pair the scanner with the device. See Pairing Bluetooth Scanners for more information.
2. Ensure that an app is open on the device and a text field is in focus (text cursor in text field).
3. Point the scanner at a barcode.

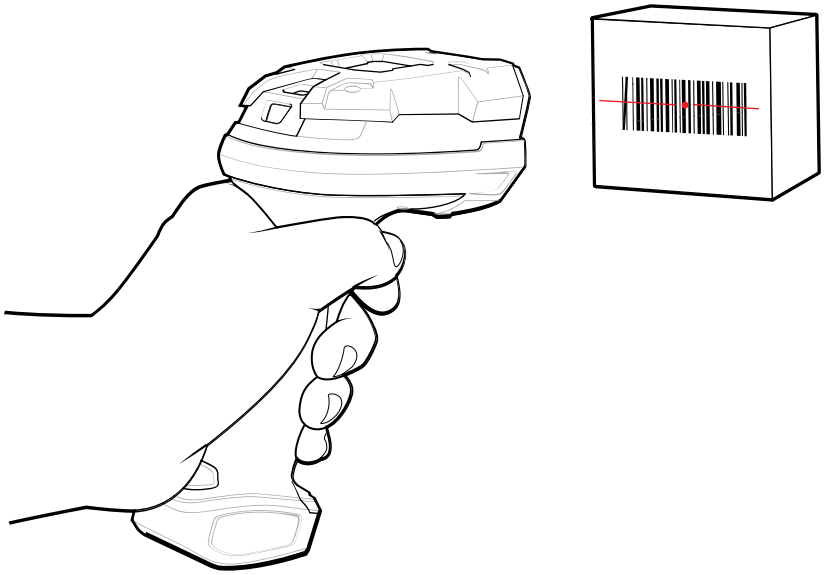

4. Press and hold the trigger.

   Ensure the barcode is within the area formed by the aiming pattern. The aiming dot increases visibility in bright lighting conditions.

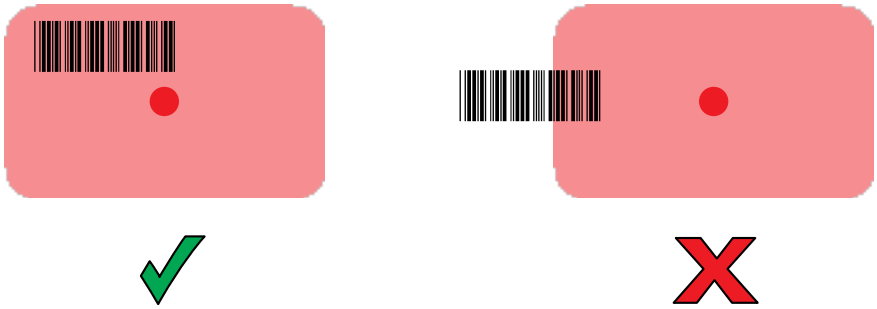

   The captured data appears in the text field.

Scanning with the DS2278 Digital Scanner

Use the DS2278 Digital Scanner to capture barcode data.

Figure 22 DS2278 Digital Scanner

Refer to the DS2278 Digital Scanner Product Reference Guide for more information.

NOTE: To read a barcode, a scan-enabled app is required. The device contains the DataWedge app that allows the user to enable the scanner to decode barcode data and display the barcode content.

To scan with the DS2278:

1. Pair the DS2278 with the device. See Pairing a Bluetooth Scanner for more information.
2. Ensure that an app is open on the device and a text field is in focus (text cursor in text field).

3. Point the scanner at a barcode.

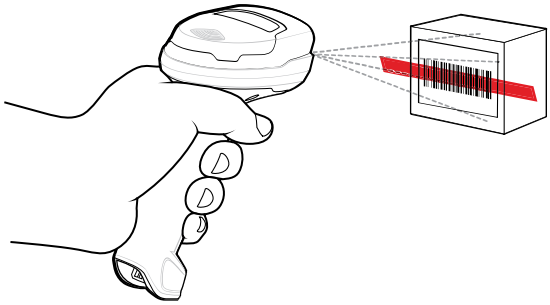

4. Press and hold the trigger.
5. Ensure the aiming pattern covers the barcode.

6. Upon successful decode, the scanner beeps and the LED flashes, and the scan line turns off.

   The captured data appears in the text field.

Scanning with the DS8178 Digital Scanner

Use the DS8178 Bluetooth Scanner to capture barcode data.

Figure 23 DS8178 Digital Scanner

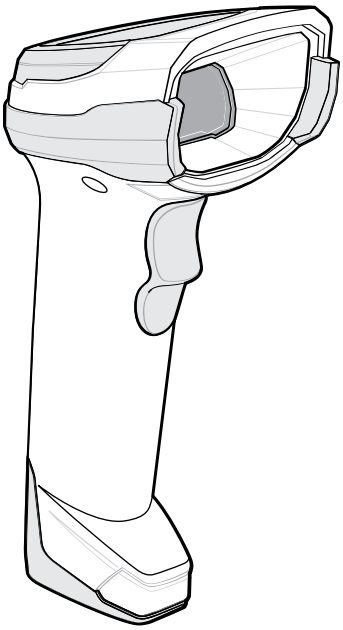

Refer to the DS8178 Digital Scanner Product Reference Guide for more information.

NOTE: To read a barcode, a scan-enabled app is required. The device contains the DataWedge app that allows the user to enable the scanner to decode barcode data and display the barcode content.

To scan with the DS8178 scanner:

1. Pair the scanner with the device. See Pairing Bluetooth Scanners for more information.
2. Ensure that an app is open on the device and a text field is in focus (text cursor in text field).
3. Point the scanner at a barcode.

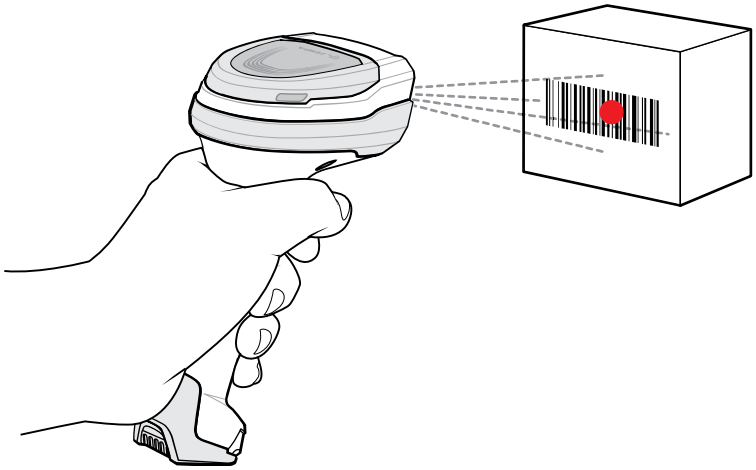

4. Press and hold the trigger.
5. Ensure the barcode is within the area formed by the aiming pattern. The aiming dot increases visibility in bright lighting conditions.

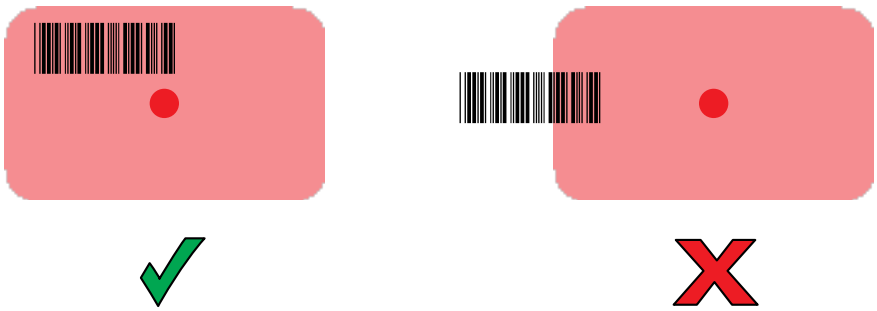

6. Upon successful decode, the scanner beeps and the LED flashes, and the scan line turns off. The captured data appears in the text field.

Scanning with the LI3678 Linear Imager

Use the LI3678 linear imager to capture barcode data.

Figure 24 LI3678 Bluetooth Scanner

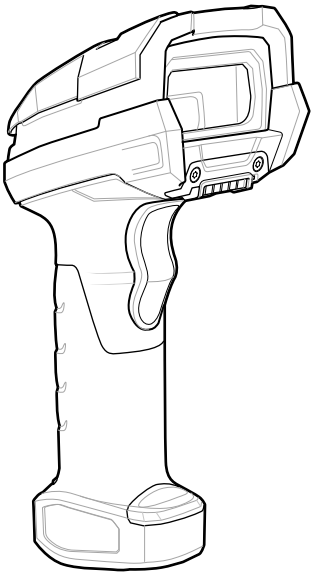

Refer to the LI3678 Product Reference Guide for more information.

NOTE: To read a barcode, a scan-enabled app is required. The device contains the DataWedge app that allows the user to enable the scanner to decode barcode data and display the barcode content.

To scan with the LI3678:

1. Pair the LI3678 with the device. See Pairing a Bluetooth Scanner for more information.
2. Ensure that an app is open on the device and a text field is in focus (text cursor in text field).
3. Point the LI3678 at a barcode.
4. Press and hold the trigger.

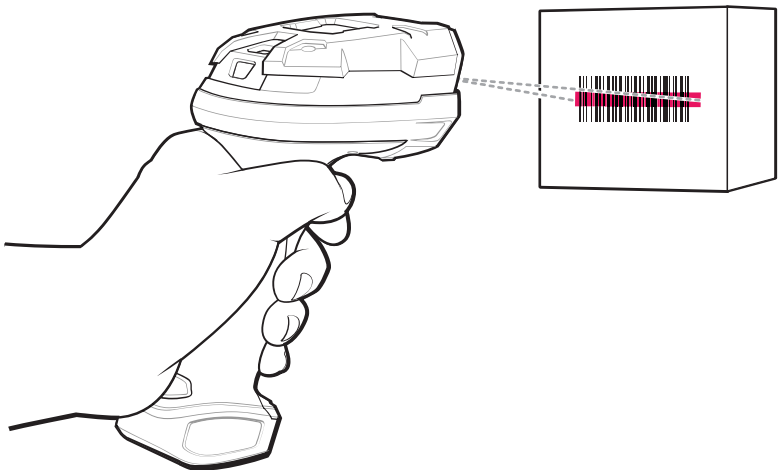

5. Ensure the aiming pattern covers the barcode.

Upon successful decode, the scanner beeps and the LED displays a single green flash.

The captured data appears in the text field.

Pairing a Bluetooth Ring Scanner

Before using a Bluetooth Ring Scanner with the device, connect the device to the Ring Scanner.

To connect the Ring Scanner to the device, use one of the following methods:

- Near Field Communication (NFC)
- Simple Serial Interface (SSI)
- Bluetooth Human Interface Device (HID) Mode

Pairing in SSI Mode Using Near Field Communication

The device can pair NFC-capable ring scanners (RS5100, RS6000, or RS6100) in Simple Serial Interface (SSI) Mode using NFC.

1. Ensure that NFC is enabled on the device.
2. Align the NFC icon on the Ring Scanner with the NFC antenna on the front of the device.

The Status LED blinks blue, indicating that the Ring Scanner is attempting to establish a connection with the device. When a connection is established, the Status LED turns off, and the Ring Scanner emits a single string of low/high beeps.

A notification appears on the device screen and the displays in the Status bar.

Pairing in HID Mode Using Near Field Communication

The device can pair NFC-capable ring scanners (RS5100, RS6000, or RS6100) in Human Interface Device (HID) Mode using NFC.

NOTE: NFC is supported on the premium configurations of the device. Not all Zebra devices support NFC readers and the Tap-to-Pair feature.

1. Ensure that NFC is enabled on the device.
2. Ensure that Bluetooth is enabled on both devices.
3. Ensure that the Bluetooth device to discover is in discoverable mode.
4. Ensure that the two devices are within 10 meters (32.8 feet) of one another.

5. Place the Ring Scanner in Human Interface Device (HID) mode. If the Ring Scanner is already in HID mode, skip to step 6.
   a) Remove the battery from the Ring Scanner.
   b) Press and hold the Restore key.
   c) Install the battery onto the Ring Scanner.
   d) Keep holding the Restore key for about five seconds until a chirp is heard and the Scan LEDs flash green.
   e) Scan the barcode below to place the Ring Scanner in HID mode.

   Figure 25 Bluetooth HID Barcode

   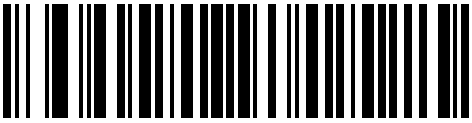

6. Remove the battery from the Ring Scanner.
7. Re-install the battery into the Ring Scanner.
8. Align the NFC icon on the Ring Scanner with the NFC icon on the device.

The Status LED blinks blue, indicating that the Ring Scanner is attempting to establish a connection with the device. When a connection is established, the Status LED turns off, and the Ring Scanner emits a single string of low/high beeps.

A notification appears on the device screen and the appears in the Status bar.

Pairing Using Simple Serial Interface (SSI)

Pair the Ring Scanner to the device using Simple Serial Interface.

1. Swipe up from the bottom of the Home screen and touch the **Bluetooth Pairing Utility** icon.
2. Using the Ring Scanner, scan the barcode on the screen.

   The Ring Scanner emits a string of high/low/high/low beeps. The Scan LED flashes green indicating that the Ring Scanner is attempting to establish a connection with the device. When a connection is established, the Scan LED turns off and the Ring Scanner emits one string of low/high beeps.

   A notification appears on the Notification panel and the icon appears in the Status bar.

Pairing the Ring Scanner Using Bluetooth Human Interface Device

Pair the Ring Scanner to the device using Human Interface Device (HID).

1. Ensure that Bluetooth is enabled on both devices.
2. Ensure that the Bluetooth device to discover is in discoverable mode.
3. Ensure that the two devices are within 10 m (32.8 ft) of one another.

4. Place the Ring Scanner in HID mode. If the Ring Scanner is already in HID mode, skip to step 5.
   a) Remove the battery from the Ring Scanner.
   b) Press and hold **Restore**.
   c) Install the battery onto the Ring Scanner.
   d) Keep holding the Restore key for about five seconds until a chirp is heard and the Scan LEDs flash green.
   e) Scan the barcode below to place the Ring Scanner in HID mode.

Figure 26 RS507 Bluetooth HID Barcode

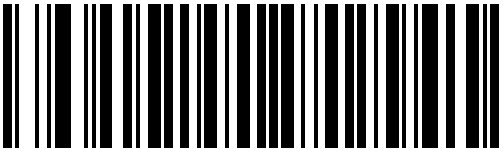

Figure 27 RS6000 Bluetooth HID Barcode

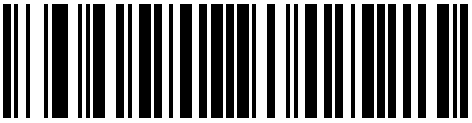

5. Remove the battery from the Ring Scanner.
6. Re-install the battery into the Ring Scanner.
7. Swipe down from the Status bar to open the Quick Access panel and then touch ⚙.
8. Touch **Bluetooth**.
9. Touch **Pair new device**. The device begins searching for discoverable Bluetooth devices in the area and displays them under **Available devices**.
10. Scroll through the list and select Ring Scanner.

    The device connects to the Ring Scanner and **Connected** appears below the device name. The Bluetooth device is added to the **Paired devices** list and a trusted (“paired”) connection is established.

    A notification appears on the Notification panel and the icon appears in the Status bar.

Pairing a Bluetooth Scanner

Before using a Bluetooth scanner with the device, connect the device to the Bluetooth scanner.

Connect the scanner to the device using one of the following methods:

- Simple Serial Interface (SSI) mode
- Bluetooth Human Interface Device (HID) mode

Pairing Using Simple Serial Interface (SSI)

Pair the Ring Scanner to the device using Simple Serial Interface.

1. Ensure that the two devices are within 10 m (32.8 ft) of one another.

2. Install the battery into the scanner.
3. Swipe up from the bottom of the Home screen and touch the **Bluetooth Pairing Utility** icon.

4. Using the Ring Scanner, scan the barcode on the screen.

   The Ring Scanner emits a string of high/low/high/low beeps. The Scan LED flashes green, indicating that the Ring Scanner is attempting to establish a connection with the device. When a connection is established, the Scan LED turns off and the Ring Scanner emits one string of low/high beeps.

   A notification appears on the Notification panel and the appears in the Status bar.

Pairing Using Bluetooth Human Interface Device

To pair the scanner with the device using HID:

1. Remove the battery from the scanner.
2. Replace the battery.
3. After the scanner reboots, scan the barcode below to place the scanner in HID mode.

4. On the device, swipe down from the Status bar to open the Quick Access panel and then touch .
5. Touch **Bluetooth**.

6. Touch **Pair new device**. The device begins searching for discoverable Bluetooth devices in the area and displays them under **Available devices**.
7. Scroll through the list and select XXXXX xxxxxx, where XXXXX is the scanner and xxxxxx is the serial number.

   The device connects to the scanner, the scanner beeps once and **Connected** appears below the device name. The Bluetooth device is added to the **Paired devices** list and a trusted (paired) connection is established.

DataWedge

DataWedge is a utility that adds advanced barcode scanning capability to any application without writing code. It runs in the background and handles the interface to built-in barcode scanners. The captured barcode data is converted to keystrokes and sent to the target application as if it was typed on the keypad.

DataWedge allows any app on the device to get data from input sources such as a barcode scanner, MSR, RFID, voice, or serial port and manipulate the data based on options or rules.

Configure DataWedge to:

- Provide data capture services from any app.
- Use a particular scanner, reader, or other peripheral devices.
- Properly format and transmit data to a specific app.

To configure DataWedge, go to techdocs.zebra.com/datawedge/.

Enabling DataWedge

This procedure provides information on how to enable DataWedge on the device.

1. Swipe up from the bottom of the Home screen and touch .
2. Touch > **Settings**.
3. Touch the **DataWedge enabled** checkbox.

   A blue checkmark appears in the checkbox indicating that DataWedge is enabled.

Disabling DataWedge

This procedure provides information on how to disable DataWedge on the device.

1. Swipe up from the bottom of the Home screen and touch .
2. Touch .
3. Touch **Settings**.
4. Touch **DataWedge enabled**.

Supported Decoders

This section provides the supported decoders for each data capture option.

Camera Supported Decoders

This section lists the supported decoders for the internal camera.

Table 14 Camera-Supported Decoders

Decoder	Default State	Decoder	Default State	Decoder	Default State
Australian Postal	O	EAN8	X	MSI	O
Aztec	X	Grid Matrix	O	PDF417	X
Canadian Postal	O	GS1 DataBar	X	QR Code	X
Chinese 2 of 5	O	GS1 DataBar Expanded	X	Decoder Signature	O
Codabar	X	GS1 DataBar Limited	O	TLC 39	O
Code 11	O	GS1 Datamatrix	O	Trioptic 39	O
Code 128	X	GS1 QRCode	O	UK Postal	O
Code 39	X	HAN XIN	O	UPCA	X
Code 93	O	Interleaved 2 of 5	O	UPCE0	X
Composite AB	O	Japanese Postal	O	UPCE1	O
Composite C	O	Korean 3 of 5	O	US4state	O
Discrete 2 of 5	O	MAIL MARK	X	US4state FICS	O
Datamatrix	X	Matrix 2 of 5	O	US Planet	O
Dutch Postal	O	Maxicode	X	US Postnet	O
DotCode	X	MicroPDF	O		
EAN13	X	MicroQR	O		

Key: X = Enabled, O = Disabled, - = Not Supported

SE55 Internal Imager Supported Decoders

This section lists the supported decoders for the SE55 internal imager.

Table 15 SE55 Internal Imager-Supported Decoders

Decoder	Default State	Decoder	Default State	Decoder	Default State
Australian Postal	O	EAN8	X	MSI	O

Table 15 SE55 Internal Imager-Supported Decoders (Continued)

Decoder	Default State	Decoder	Default State	Decoder	Default State
Aztec	X	Grid Matrix	O	PDF417	X
Canadian Postal	O	GS1 DataBar	X	QR Code	X
Chinese 2 of 5	O	GS1 DataBar Expanded	X	Decoder Signature	O
Codabar	X	GS1 DataBar Limited	O	TLC 39	O
Code 11	O	GS1 Datamatrix	O	Trioptic 39	O
Code 128	X	GS1 QRCode	O	UK Postal	O
Code 39	X	HAN XIN	O	UPCA	X
Code 93	O	Interleaved 2 of 5	O	UPCE0	X
Composite AB	O	Japanese Postal	O	UPCE1	O
Composite C	O	Korean 3 of 5	O	US4state	O
Discrete 2 of 5	O	MAIL MARK	X	US4state FICS	O
Datamatrix	X	Matrix 2 of 5	O	US Planet	O
Dutch Postal	O	Maxicode	X	US Postnet	O
DotCode	O	MicroPDF	O		
EAN13	X	MicroQR	O		

SE4720 Internal Imager Supported Decoders

This section lists the supported decoders for the SE4720 internal imager.

Table 16 SE4720 Internal Imager-Supported Decoders

Decoder	Default State	Decoder	Default State	Decoder	Default State
Australian Postal	O	EAN8	X	MSI	O
Aztec	X	Grid Matrix	O	PDF417	X
Canadian Postal	O	GS1 DataBar	X	QR Code	X
Chinese 2 of 5	O	GS1 DataBar Expanded	X	Decoder Signature	O
Codabar	X	GS1 DataBar Limited	O	TLC 39	O
Code 11	O	GS1 Datamatrix	O	Trioptic 39	O
Code 128	X	GS1 QRCode	O	UK Postal	O
Code 39	X	HAN XIN	O	UPCA	X

Table 16 SE4720 Internal Imager-Supported Decoders (Continued)

Decoder	Default State	Decoder	Default State	Decoder	Default State
Code 93	O	Interleaved 2 of 5	O	UPCE0	X
Composite AB	O	Japanese Postal	O	UPCE1	O
Composite C	O	Korean 3 of 5	O	US4state	O
Discrete 2 of 5	O	MAIL MARK	X	US4state FICS	O
Datamatrix	X	Matrix 2 of 5	O	US Planet	O
Dutch Postal	O	Maxicode	X	US Postnet	O
DotCode	O	MicroPDF	O		
EAN13	X	MicroQR	O		

Key: X = Enabled, O = Disabled, - = Not Supported

SE4770 Internal Imager Supported Decoders

This section lists the supported decoders for the SE4770 internal imager.

Table 17 SE4770 Internal Imager-Supported Decoders

Decoder	Default State	Decoder	Default State	Decoder	Default State
Australian Postal	O	EAN8	X	MSI	O
Aztec	X	Grid Matrix	O	PDF417	X
Canadian Postal	O	GS1 DataBar	X	QR Code	X
Chinese 2 of 5	O	GS1 DataBar Expanded	X	Decoder Signature	O
Codabar	X	GS1 DataBar Limited	O	TLC 39	O
Code 11	O	GS1 Datamatrix	O	Trioptic 39	O
Code 128	X	GS1 QRCode	O	UK Postal	O
Code 39	X	HAN XIN	O	UPCA	X
Code 93	O	Interleaved 2 of 5	O	UPCE0	X
Composite AB	O	Japanese Postal	O	UPCE1	O
Composite C	O	Korean 3 of 5	O	US4state	O
Discrete 2 of 5	O	MAIL MARK	X	US4state FICS	O
Datamatrix	X	Matrix 2 of 5	O	US Planet	O
Dutch Postal	O	Maxicode	X	US Postnet	O

Table 17 SE4770 Internal Imager-Supported Decoders (Continued)

Decoder	Default State	Decoder	Default State	Decoder	Default State
DotCode	O	MicroPDF	O		
EAN13	X	MicroQR	O		

Key: X = Enabled, O = Disabled, - = Not Supported

RS507/RS507x Supported Decoders

This section lists the supported decoders for the RS507/RS507x Ring Scanner.

Table 18 RS507/RS507x Supported Decoders

Decoder	Default State	Decoder	Default State	Decoder	Default State
Australian Postal	O	EAN8	X	MSI	O
Aztec	X	Grid Matrix	O	PDF417	X
Canadian Postal	-	GS1 DataBar	X	QR Code	X
Chinese 2 of 5	O	GS1 DataBar Expanded	X	Decoder Signature	O
Codabar	X	GS1 DataBar Limited	O	TLC 39	O
Code 11	O	GS1 Datamatrix	-	Trioptic 39	O
Code 128	X	GS1 QRCode	-	UK Postal	O
Code 39	O	HAN XIN	-	UPCA	X
Code 93	O	Interleaved 2 of 5	O	UPCE0	X
Composite AB	O	Japanese Postal	O	UPCE1	O
Composite C	O	Korean 3 of 5	O	US4state	O
Discrete 2 of 5	O	MAIL MARK	-	US4state FICS	O
Datamatrix	X	Matrix 2 of 5	O	US Planet	O
Dutch Postal	O	Maxicode	X	US Postnet	O
DotCode	O	MicroPDF	O		
EAN13	X	MicroQR	O		

Key: X = Enabled, O = Disabled, - = Not Supported

RS5100 Supported Decoders

This section lists the supported decoders for the RS5100 Ring Scanner.

Table 19 RS5100-Supported Decoders

Decoder	Default State	Decoder	Default State	Decoder	Default State
Australian Postal	O	EAN8	X	MSI	O
Aztec	X	Grid Matrix	O	PDF417	X
Canadian Postal	O	GS1 DataBar	X	QR Code	X
Chinese 2 of 5	O	GS1 DataBar Expanded	X	Decoder Signature	O
Codabar	X	GS1 DataBar Limited	O	TLC 39	O
Code 11	O	GS1 Datamatrix	O	Trioptic 39	O
Code 128	X	GS1 QRCode	O	UK Postal	O
Code 39	X	HAN XIN	O	UPCA	X
Code 93	O	Interleaved 2 of 5	O	UPCE0	X
Composite AB	O	Japanese Postal	O	UPCE1	O
Composite C	O	Korean 3 of 5	O	US4state	O
Discrete 2 of 5	O	MAIL MARK	X	US4state FICS	O
Datamatrix	X	Matrix 2 of 5	O	US Planet	O
Dutch Postal	O	Maxicode	X	US Postnet	O
DotCode	O	MicroPDF	O		
EAN13	X	MicroQR	O		

Key: X = Enabled, O = Disabled, - = Not Supported

RS6000 Supported Decoders

This section lists the supported decoders for the RS6000 Ring Scanner.

Table 20 RS6000-Supported Decoders

Decoder	Default State	Decoder	Default State	Decoder	Default State
Australian Postal	O	EAN8	X	MSI	O
Aztec	X	Grid Matrix	O	PDF417	X
Canadian Postal	O	GS1 DataBar	X	QR Code	X

Table 20 RS6000-Supported Decoders (Continued)

Decoder	Default State	Decoder	Default State	Decoder	Default State
Chinese 2 of 5	O	GS1 DataBar Expanded	X	Decoder Signature	O
Codabar	X	GS1 DataBar Limited	O	TLC 39	O
Code 11	O	GS1 Datamatrix	O	Trioptic 39	O
Code 128	X	GS1 QRCode	O	UK Postal	O
Code 39	X	HAN XIN	O	UPCA	X
Code 93	O	Interleaved 2 of 5	O	UPCE0	X
Composite AB	O	Japanese Postal	O	UPCE1	O
Composite C	O	Korean 3 of 5	O	US4state	O
Discrete 2 of 5	O	MAIL MARK	X	US4state FICS	O
Datamatrix	X	Matrix 2 of 5	O	US Planet	O
Dutch Postal	O	Maxicode	X	US Postnet	O
DotCode	O	MicroPDF	O		
EAN13	X	MicroQR	O		

Key: X = Enabled, O = Disabled, - = Not Supported

DS2278 Supported Decoders

This section lists the supported decoders for the DS2278 Digital Scanner.

Table 21 DS2278 Digital Scanner-Supported Decoders

Decoder	Default State	Decoder	Default State	Decoder	Default State
Australian Postal	O	EAN8	X	MSI	O
Aztec	X	Grid Matrix	O	PDF417	X
Canadian Postal	—	GS1 DataBar	X	QR Code	X
Chinese 2 of 5	O	GS1 DataBar Expanded	X	Decoder Signature	O
Codabar	X	GS1 DataBar Limited	O	TLC 39	O
Code 11	O	GS1 Datamatrix	O	Trioptic 39	O
Code 128	X	GS1 QRCode	O	UK Postal	O
Code 39	X	HAN XIN	—	UPCA	X

Table 21 DS2278 Digital Scanner-Supported Decoders (Continued)

Decoder	Default State	Decoder	Default State	Decoder	Default State
Code 93	O	Interleaved 2 of 5	O	UPCE0	X
Composite AB	O	Japanese Postal	O	UPCE1	O
Composite C	O	Korean 3 of 5	O	US4state	O
Discrete 2 of 5	O	MAIL MARK	X	US4state FICS	O
Datamatrix	X	Matrix 2 of 5	O	US Planet	O
Dutch Postal	O	Maxicode	X	US Postnet	O
DotCode	O	MicroPDF	O		
EAN13	X	MicroQR	O		

Key: X = Enabled, O = Disabled, — = Not Supported

DS3678 Supported Decoders

This section lists the supported decoders for the DS3678 scanner.

Table 22 DS3678-Supported Decoders

Decoder	Default State	Decoder	Default State	Decoder	Default State
Australian Postal	O	EAN8	X	MSI	O
Aztec	X	Grid Matrix	O	PDF417	X
Canadian Postal	—	GS1 DataBar	X	QR Code	X
Chinese 2 of 5	O	GS1 DataBar Expanded	X	Decoder Signature	—
Codabar	X	GS1 DataBar Limited	O	TLC 39	O
Code 11	O	GS1 Datamatrix	O	Trioptic 39	O
Code 128	X	GS1 QRCode	O	UK Postal	O
Code 39	X	HAN XIN	O	UPCA	X
Code 93	O	Interleaved 2 of 5	O	UPCE0	X
Composite AB	O	Japanese Postal	O	UPCE1	O
Composite C	O	Korean 3 of 5	O	US4state	O
Discrete 2 of 5	O	MAIL MARK	X	US4state FICS	O
Datamatrix	X	Matrix 2 of 5	O	US Planet	O
Dutch Postal	O	Maxicode	X	US Postnet	O

Table 22 DS3678-Supported Decoders (Continued)

Decoder	Default State	Decoder	Default State	Decoder	Default State
DotCode	O	MicroPDF	O		
EAN13	X	MicroQR	O		

Key: X = Enabled, O = Disabled, — = Not Supported

DS8178 Supported Decoders

This section lists the supported decoders for the DS8178 Digital scanner.

Table 23 DS8178 Digital Scanner-Supported Decoders

Decoder	Default State	Decoder	Default State	Decoder	Default State
Australian Postal	O	EAN8	X	MSI	O
Aztec	X	Grid Matrix	O	PDF417	X
Canadian Postal	—	GS1 DataBar	X	QR Code	X
Chinese 2 of 5	O	GS1 DataBar Expanded	X	Decoder Signature	—
Codabar	X	GS1 DataBar Limited	O	TLC 39	O
Code 11	O	GS1 Datamatrix	O	Trioptic 39	O
Code 128	X	GS1 QRCode	O	UK Postal	O
Code 39	X	HAN XIN	—	UPCA	X
Code 93	O	Interleaved 2 of 5	O	UPCE0	X
Composite AB	O	Japanese Postal	O	UPCE1	O
Composite C	O	Korean 3 of 5	O	US4state	O
Discrete 2 of 5	O	MAIL MARK	X	US4state FICS	O
Datamatrix	X	Matrix 2 of 5	O	US Planet	O
Dutch Postal	O	Maxicode	X	US Postnet	O
DotCode	O	MicroPDF	O		
EAN13	X	MicroQR	O		

Key: X = Enabled, O = Disabled, — = Not Supported

LI3678 Supported Decoders

This section lists the supported decoders for the LI3678 scanner.

Table 24 LI3678-Supported Decoders

Decoder	Default State	Decoder	Default State	Decoder	Default State
Australian Postal	—	EAN8	X	MSI	O
Aztec	—	Grid Matrix	O	PDF417	—
Canadian Postal	—	GS1 DataBar	X	QR Code	—
Chinese 2 of 5	O	GS1 DataBar Expanded	X	Decoder Signature	—
Codabar	X	GS1 DataBar Limited	O	TLC 39	O
Code 11	O	GS1 Datamatrix	—	Trioptic 39	O
Code 128	X	GS1 QRCode	—	UK Postal	—
Code 39	X	HAN XIN	O	UPCA	X
Code 93	O	Interleaved 2 of 5	O	UPCE0	X
Composite AB	—	Japanese Postal	—	UPCE1	O
Composite C	—	Korean 3 of 5	O	US4state	—
Discrete 2 of 5	O	MAIL MARK	—	US4state FICS	—
Datamatrix	—	Matrix 2 of 5	O	US Planet	—
Dutch Postal	—	Maxicode	—	US Postnet	—
DotCode	O	MicroPDF	—		
EAN13	X	MicroQR	—		

Key: X = Enabled, O = Disabled, — = Not Supported

Wireless

This section provides information on the wireless features of the device.

The following wireless features are available on the device:

- Wireless Wide Area Network (WWAN)
- Wireless Local Area Network (WLAN)
- Bluetooth
- Cast
- Near Field Communication (NFC)

Wireless Wide Area Networks

Use Wireless wide area networks (WWANs) to access data over a cellular network.

NOTE: Applies to TC58e only.

This section provides information on:

- Sharing a data connection
- Monitoring data usage
- Changing Cellular Network settings

Sharing the Mobile Data Connection

The **Tethering & Portable Hotspot** settings allow sharing the mobile data connection with a single computer via USB tethering or Bluetooth tethering.

Share the data connection with up to eight devices at once, by turning it into a portable Wi-Fi hotspot. While the device is sharing its data connection, an icon displays at the top of the screen and a corresponding message appears in the notification list.

Enabling USB Tethering

This section describes how to enable USB Tethering.

NOTE: USB tethering is not supported on computers running Mac OS. If the computer is running Windows or a recent version of Linux (such as Ubuntu), follow these instructions without any special preparation. If running a version of Windows that precedes Windows 7, or some other

operating system, you may need to prepare the computer to establish a network connection via USB.

1. Connect the device to a host computer with a USB cable.

   The notification **Charging this device via USB** appears in the Notifications panel.
2. Go to **Settings**.
3. Touch **Network & Internet**.
4. Touch **Hotspot & tethering**.
5. Touch the **USB tethering** switch to enable.

The host computer is now sharing the device's data connection.

To stop sharing the data connection, touch the **USB tethering** switch again or disconnect the USB cable.

Enabling Bluetooth Tethering

Use Bluetooth tethering to share the data connection with a host computer.

1. Pair the device with the host computer.
2. Go to **Settings**.
3. Touch **Network & Internet** > **Hotspot & tethering**.
4. Touch the **Bluetooth tethering** switch to enable.

The host computer is now sharing the device's data connection.

To stop sharing the data connection, touch the **Bluetooth tethering** switch again.

Enabling Wi-Fi Hotspot

After configuring the device as a Wi-Fi Hotspot, turn on Wi-Fi Hotspot to begin using it.

1. Go to **Settings**.
2. Touch **Networking & Internet**.
3. Touch **Hotspot & tethering**.
4. Touch **Wi-Fi hotspot**.
5. Toggle the switch to enable.

   After a moment, the device starts broadcasting its Wi-Fi network name (SSID). Connect to it with up to eight computers or other devices. The Hotspot icon appears in the Status bar.

To stop sharing the data connection, touch the toggle switch again.

Configuring the Wi-Fi Hotspot

To configure a Wi-Fi hotspot:

1. Go to **Settings**.
2. Touch **Networking & Internet**.
3. Touch **Hotspot & tethering**.
4. Touch **Wi-Fi hotspot**.

5. In the **Hotspot** name text field, edit the name for the hotspot.
6. Touch **Security** and select a security method from the drop-down list.
   - **WPA3-Personal**, **WPA2/WPA3-Personal**, or **WPA2-Personal**
     a. Touch **Hotspot password**.
     b. Enter a password.
     c. Touch **OK**.
   - **None** - If selected, a password is not required.
7. Touch **AP Band** and select **2.4 Ghz Band** or **5.0 Ghz Band preferred**.
8. TC58e only - To change the Data Usage Warning & Limit, go to **Settings** > **Networking & Internet** > **Mobile network** > **Data Warning & Limit**.
9. If desired, touch **Turn off hotspot automatically** to turn off Wi-Fi Hotspot when no devices are connected.
10. Select **Additional Settings** to configure the hotspot channel for the selected band, maximum number of clients, and connected clients.

Data Usage

Data usage refers to the amount of data uploaded or downloaded by the device during a given period. Depending on the wireless plan, you may be charged additional fees when your data usage exceeds your plan's limit.

Data usage settings allow you to:

- Enable Data Saver.
- Set the data usage warning level.
- Set a data usage limit.
- View or restrict data usage by app.
- Identify mobile hotspots and restrict background downloads that may result in extra charges.

Setting Data Usage Warning

Set a warning alert when the device has used a certain amount of mobile data.

1. Go to **Settings**.
2. Touch **Network & Internet** > **Mobile Network** > **Data warning & limit** > **Mobile data usage cycle**.
3. If necessary, touch **Set data warning** to enable it.
4. Touch **Data warning**.
5. Enter a number.

   To switch between megabytes (MB) and gigabytes (GB), touch the down arrow.
6. Touch **SET**.

When the data usage reaches the set level, a notification appears.

Setting Data Limit

Set a data limit when the device has used a certain amount of data.

1. Go to **Settings**.
2. Touch **Network & Internet** > **Mobile Network** > **Data warning & limit** > **Mobile data usage cycle**.
3. Touch **Set data limit**.

   A message displays stating that the phone will turn off mobile data once it reaches the limit you set.
4. Touch **OK**.
5. Touch **Data limit**.
6. Enter a number.

   To switch between megabytes (MB) and gigabytes (GB), touch the down arrow.
7. Touch **SET**.

When the limit is reached, data automatically turns off and a notification appears.

Cellular Network Settings

Cellular network settings apply to TC58e WWAN devices only.

Data When Roaming

Roaming is disabled by default to prevent the device from transmitting data over other carriers' mobile networks when leaving an area that is covered by the carrier's networks. This is useful for controlling expenses if the service plan does not include data roaming.

Enabling Data on GSM Devices

1. Go to **Settings**.
2. Touch **Networking & Internet** > **Mobile network**.
3. Touch **Roaming**.

The switch moves to the on position.

Setting Preferred Network

Change the device network operating mode.

1. Go to **Settings**.
2. Touch **Network & Internet** > **Mobile network**.

   Automatically select network is enabled by default.
3. Touch **Network**.
4. In the **Available network** list, select a carrier network.

Configuring the Access Point Name

To use the data on a network, configure the APN information.

NOTE: Many service provider Access Point Name (APN) data are pre-configured in the device. The APN information for all other service providers must be obtained from the wireless service provider.

1. Go to **Settings**.
2. Touch **Network & Internet** > **Mobile network** > **Access Point Names**.
3. Touch an APN name in the list to edit an existing APN or touch **+** to create a new APN.
4. Touch each APN setting and enter the appropriate data obtained from the wireless service provider.
5. When finished, touch ⋮ > **Save**.
6. Touch the radio button next to the APN name to start using it.

Activating an eSIM

Activating an eSIM on the device.

Before adding an eSIM, contact your carrier to obtain the eSIM service and its activation or QR code.

NOTE: Ensure Airplane mode is turned **OFF**.

1. On the device, establish an internet connection via Wi-Fi or cellular data with an installed SIM card.
2. Go to **Settings**.
3. Touch **Network & internet** > **Mobile Networks**.
4. Touch **+** next to **SIMs** if a SIM card is already installed, or touch **SIMs** if there is no SIM card installed.

NOTE: A secure lock screen must be created or already in use to proceed.

   The **Mobile network** screen displays.

5. Select either:
   - **MANUAL CODE ENTRY** to enter the activation code, or
   - **SCAN** to scan the QR code to download the eSIM profile.

   The **Confirmation!!!** dialog box displays.
6. Touch **OK**.
7. Enter the activation code or scan the QR Code.

NOTE: If you are manually entering the activation code, you will have to select **Next** to proceed.

   The **Downloading a profile** message displays, followed by the **Use <Network Name>?** message.

8. Touch **ACTIVATE**.
9. Touch **Done**.

   The eSIM is now active.

Deactivating an eSIM

Turn off an eSIM temporarily and reactivate it later.

NOTE: Ensure Airplane mode is turned **OFF**.

1. Touch **Network & internet** > **SIMs**.
2. In the **Downloaded SIM** section, touch the name of the eSIM to deactivate.
3. Touch **Use SIM** switch to turn off the eSIM.
4. Touch **Yes**.

   The eSIM is deactivated.

Reactivating an eSim

Once the SIM is deactivated, you can reactivate it.

1. Touch **Use SIM** switch to turn on the eSIM.
2. Touch **Yes**.

   The eSIM is reactivated.

Erasing an eSIM Profile

Erasing an eSIM profile removes it completely from the device.

After erasing an eSIM from the device, you cannot use it again.

NOTE: Ensure Airplane mode is turned **OFF**.

1. Touch **Network & internet** > **SIMs**.
2. In the **Downloaded SIM** section, touch the name of the eSIM to erase.
3. Touch **Erase**.

NOTE: A secure lock screen must be created or already in use to proceed.

   The **Erase this downloaded SIM?** message displays.

4. Touch **Erase**.

   The eSIM profile is erased from the device.

Locking the SIM Card

Locking the SIM card requires your to enter a PIN every time the device is turned on. If the correct PIN is not entered, only emergency calls can be made

1. Go to **Settings**.
2. Touch **Security** > **More security settings** > **SIM card lock** > **Lock SIM card**.
3. Enter the PIN associated with the card.
4. Touch **OK**.

5. Reset the device.

Wireless Local Area Network

Wireless local area networks (WLANs) allow the device to communicate wirelessly inside a building. Before using the device on a WLAN, the facility must be set up with the required hardware to run the WLAN (sometimes known as infrastructure). The infrastructure and the device must both be properly configured to enable this communication.

NOTE: GTC authentication without a password (Dynamic GTC) requires a Mobility DNA Enterprise License.

Refer to the documentation provided with the infrastructure (access points (APs), access ports, switches, Radius servers, etc.) for instructions on how to set up the infrastructure.

Once the infrastructure is set up to enforce the chosen WLAN security scheme, use the **Network & internet** settings to configure the device to match the security scheme.

The device supports the following WLAN security options:

- None
- Enhanced Open
- Wireless Equivalent Privacy (WEP)
- Wi-Fi Protected Access (WPA)/WPA2 Personal (PSK)
- WPA3-Personal
- WPA/WPA2-Enterprise (EAP) or WPA3-Enterprise
  - Extensible Authentication Protocol Method for Authentication and Key Agreement (AKA).
  - Improved Extensible Authentication Protocol Method for Authentication and Key Agreement (AKA').
  - Tunneled Transport Layer Security (TTLS) - with Password Authentication Protocol (PAP), MSCHAP, MSCHAPv2, and GTC authentication.
  - Protected Extensible Authentication Protocol (PEAP) - with MSCHAPV2 and GTC authentication.
  - Transport Layer Security (TLS)
- Tunneled Transport Layer Security (TTLS) - with Password Authentication Protocol (PAP), MSCHAP and MSCHAPv2 authentication.

Connecting to a Wi-Fi Network

This section describes how to connect to a Wi-Fi network.

1. Go to **Settings**.
2. Touch **Network & internet** > **Internet**.

   The **Internet** screen displays, and the device searches for WLANs in the area and lists them.
3. Scroll through the list and select the desired WLAN network.

4. For open networks, touch the profile (or press and hold) and select **Connect**. For secure networks, enter the required password or other credentials and then touch **Connect**. See the system administrator for more information.

   The device obtains a network address and other required information from the network using the dynamic host configuration protocol (DHCP) protocol. To configure the device with a fixed internet protocol (IP) address, see Configuring the Device to Use a Static IP Address.

   In the Wi-Fi setting field, **Connected** displays, indicating that the device is connected to the WLAN.

Removing a Wi-Fi Network

This section describes how to remove a Wi-Fi network.

1. Go to **Settings**.
2. Touch **Network & internet** > **Internet**.
3. Scroll down to the bottom of the list and touch **Saved networks**.
4. Touch the name of the network.
5. Touch **FORGET**.

   The device automatically disconnects from the Wi-Fi network.

WLAN Configuration

This section provides information on configuring Wi-Fi settings.

Configuring a Secure Wi-Fi Network

1. Go to **Settings**.
2. Touch **Network & internet** > **Internet**.
3. Turn on the **Wi-Fi** switch.

   The device searches for WLANs in the area and lists them on the screen.
4. Scroll through the list and select the desired WLAN network.
5. Touch the desired network. If network security is **None**, the device automatically connects to the network. For all other network security, a dialog box appears.
6. If network security is **WPA/WPA2-Personal**, **WPA3-Personal**, or **WEP**, enter the required password, and then touch **Connect**.

7. If network security is **WPA/WPA2/WPA3 Enterprise**:
   a) Touch the **EAP method** drop-down list and select one of the following:
      - **PEAP**
      - **TLS**
      - **TTLS**
      - **PWD**
      - **SIM**
      - **AKA**
      - **AKA'**
      - **LEAP**
   b) Fill in the appropriate information. Options vary depending on the **EAP method** chosen.
      - When selecting **CA certificate**, Certification Authority (CA) certificates are installed using the **Security** settings.
      - When using the EAP methods PEAP, TLS, or TTLS, specify a domain.
      - Touch **Advanced options** to display additional network options.

Manually Adding a Wi-Fi Network

Manually add a Wi-Fi network if the network does not broadcast its name (SSID) or to add a Wi-Fi network when out of range.

1. Go to **Settings**.
2. Touch **Network & internet**.
3. Touch **Internet**.
4. Turn on the **Wi-Fi** switch.
5. Scroll to the bottom of the list and select **Add network**.
6. In the **Network name** text box, enter the name of the Wi-Fi network.
7. In the **Security** drop-down list, set the type of security to:
   - **None**
   - **Enhanced Open**
   - **WEP**
   - **WPA/WPA2-Personal**
   - **WPA3-Personal**
   - **WPA/WPA2-Enterprise**
   - **WPA3-Enterprise**
   - **WPA3-Enterprise 192-bit**
8. If the network security is **None** or **Enhanced Open**, touch **Save**.
9. If the network security is **WEP**, **WPA3-Personal**, or **WPA/WPA2-Personal**, enter the required password and then touch **Save**.

NOTE: By default, the network Proxy is set to **None** and the IP settings are set to **DHCP**. See Configuring for a Proxy Server and Configuring the Device to Use a Static IP Address.

10. If network security is **WPA/WPA2/WPA3 Enterprise**:
    a) Touch the **EAP method** drop-down list and select one of the following:
       - **PEAP**
       - **TLS**
       - **TTLS**
       - **PWD**
       - **SIM**
       - **AKA**
       - **AKA'**
       - **LEAP**
    b) Fill in the appropriate information. Options vary depending on the selected **EAP method**
       - When selecting **CA certificate**, Certification Authority (CA) certificates are installed using the **Security** settings.
       - When using the EAP methods PEAP, TLS, or TTLS, specify a domain.
       - Touch **Advanced options** to display additional network options.
11. If the network security is WPA3-Enterprise 192-bit:
    - Touch **CA certificate** and select a Certification Authority (CA) certificate. Note: Certificates are installed using the Security settings.
    - Touch **User certificate** and select a user certificate. Note: User certificates are installed using the Security settings.
    - In the **Identity** text box, enter the username credentials.
12. Touch **Save**. To connect to the saved network, touch and hold on the saved network and select **Connect to network**.

Configuring a Proxy Server

A proxy server is a server that acts as an intermediary for requests from clients seeking resources from other servers. A client connects to the proxy server and requests some service, such as a file, connection, web page, or other resource, available from a different server. The proxy server evaluates the request according to its filtering rules. For example, it may filter traffic by IP address or protocol. If the request is validated by the filter, the proxy provides the resource by connecting to the relevant server and requesting the service on behalf of the client.

Enterprise customers must set up secure computing environments within their companies, making proxy configuration essential. Proxy configuration acts as a security barrier, ensuring the proxy server monitors all traffic between the internet and intranet traffic. This is normally an integral part of security enforcement in corporate firewalls within intranets.

1. Go to **Settings**.
2. Touch **Network & internet** > **Internet**.
3. Slide the Wi-Fi switch to the **On** position.

4. In the network dialog box, select and touch a network.
5. If configuring the connected network, touch ✎ to edit the network details and then touch the down arrow to hide the keyboard.
6. Touch **Advanced options**.
7. Touch **Proxy** and select **Manual**.
8. In the **Proxy hostname** text box, enter the address of the proxy server.
9. In the **Proxy port** text box, enter the port number for the proxy server.
10. In the **Bypass proxy for** text box, enter addresses for websites that are not required to go through the proxy server. Use a comma "," between addresses. Do not use spaces or carriage returns between addresses.
11. If configuring the connected network, touch **Save** otherwise, touch **Connect**.

Configuring the Device to Use a Static IP Address

By default, the device is configured to use Dynamic Host Configuration Protocol (DHCP) to assign an Internet protocol (IP) address when connecting to a wireless network.

1. Go to **Settings**.
2. Touch **Network & internet** > **Internet**.
3. Slide the Wi-Fi switch to the **On** position.
4. In the network dialog box, select and touch a network.
5. If configuring the connected network, touch ✎ to edit the network details and then touch the down arrow to hide the keyboard.
6. Touch **Advanced options**.
7. Touch **IP settings** and select **Static**.
8. In the **IP address** text box, enter an IP address for the device.
9. If required:
   - In the **Gateway** text box, enter a gateway address for the device.
   - In the **Network prefix length** text box, enter the prefix length.
   - In the **DNS 1** text box, enter a Domain Name System (DNS) address.
   - In the **DNS 2** text box, enter a DNS address
10. If configuring the connected network, touch **Save** otherwise, touch **Connect**.

Wi-Fi Preferences

Use the Wi-Fi preferences to configure advanced Wi-Fi settings.

From the **Internet** screen, scroll down to the bottom and touch **Network preferences**.

- **Turn on Wi-Fi automatically** - When enabled, Wi-Fi automatically turns back on when near high-quality saved networks.
- **Notify for public networks** - When enabled, it notifies the user when a public network is available.
- **Additional settings** - Touch to view additional Wi-Fi settings.

- **Install Certificates** - Touch to install certificates.
- **Wi-Fi Direct** - Displays a list of devices available for a direct Wi-Fi connection.

Additional Wi-Fi Settings

Use Additional Settings to configure Wi-Fi settings.

From the **Internet** screen, scroll down to the bottom, and touch **Network preferences** > **Additional Settings**.

NOTE: Additional Wi-Fi settings are for the device, not for a specific wireless network.

- **Regulatory**
  - **Country Selection** - Displays the acquired country code.
  - **Region code** - Displays the current region code.
- **Band and Channel Selection**
  - **Wi-Fi frequency band** - Set the frequency band to: **Auto** (default), **5 GHz only** or **2.4 GHz only**.
  - **Available channels (2.4 GHz)** - Touch to display the **Available channels** menu. Select specific channels and touch **OK**.
  - **Available channels (5 GHz)** - Touch to display the **Available channels** menu. Select specific channels and touch **OK**.
  - **Available channels (6 GHz)** - Touch to display the **Available channels** menu. Select specific channels and touch **OK**.
- **Logging**
  - **Advanced Logging** - Touch to enable advanced logging or change the log directory.
  - **Wireless logs** - Use to capture Wi-Fi log files.
    - **Fusion Logger** - Touch to open the **Fusion Logger** application. This application maintains a history of high level WLAN events which helps to understand the status of connectivity.
    - **Fusion Status** - Touch to display live status of WLAN state. Also provides information about the device and connected profile.
- **About**
  - **Version** - Displays the current version information. Touch the version to display addition version details.

Wi-Fi Direct

Wi-Fi Direct devices can connect to each other without having to go through an access point. They establish their own ad-hoc network when required, letting you see which devices are available and choose which one you want to connect to.

1. Go to **Settings**.
2. Touch **Network & internet** > **Internet**.
3. Slide the **Wi-Fi** switch to the **On** position.
4. Scroll down to the bottom of the screen and touch **Network preferences** > **Wi-Fi Direct**.

5. Under **Peer devices**, touch the other device name.
6. On the other device, select **Accept**.

Connected appears on the device. On both devices, in their respective Wi-Fi Direct screens, the other device name appears in the list.

Bluetooth

Bluetooth devices can communicate without wires, using frequency-hopping spread spectrum (FHSS) radio frequency (RF) to transmit and receive data in the 2.4 GHz Industry Scientific and Medical (ISM) band (802.15.1). Bluetooth wireless technology is specifically designed for short-range (10 m (32.8 ft)) communication and low power consumption.

Devices with Bluetooth capabilities can exchange information (for example, files, appointments, and tasks) with other Bluetooth enabled devices such as printers, access points, and other mobile devices.

The device supports Bluetooth Low Energy. Bluetooth Low Energy is targeted at applications in the healthcare, fitness, security, and home entertainment industries. It provides reduced power consumption and cost while maintaining standard Bluetooth range.

Adaptive Frequency Hopping

Adaptive Frequency Hopping (AFH) is a method of avoiding fixed frequency interferers, and can be used with Bluetooth voice. All devices in the piconet (Bluetooth network) must be AFH-capable in order for AFH to work. There is no AFH when connecting and discovering devices. Avoid making Bluetooth connections and discoveries during critical 802.11b communications.

AFH for Bluetooth consists of four main sections:

- Channel Classification - A method of detecting an interference on a channel-by-channel basis, or pre-defined channel mask.
- Link Management - Coordinates and distributes the AFH information to the rest of the Bluetooth network.
- Hop Sequence Modification - Avoids interference by selectively reducing the number of hopping channels.
- Channel Maintenance - A method for periodically re-evaluating the channels.

When AFH is enabled, the Bluetooth radio “hops around” (instead of through) the 802.11b high-rate channels. AFH coexistence allows enterprise devices to operate in any infrastructure.

The Bluetooth radio in this device operates as a Class 2 device power class. The maximum output power is 2.5 mW and the expected range is 10 m (32.8 ft). A definition of ranges based on power class is difficult to obtain due to power and device differences, and whether in open space or closed office space.

NOTE: It is not recommended to perform Bluetooth wireless technology inquiry when high rate 802.11b operation is required.

Security

The current Bluetooth specification defines security at the link level. Application-level security is not specified. This allows application developers to define security mechanisms tailored to their specific needs. Link-level security occurs between devices, not users, while application-level security can be implemented on a per-user basis. The Bluetooth specification defines security algorithms and procedures required to

authenticate devices, and if needed, encrypt the data flowing on the link between the devices. Device authentication is a mandatory feature of Bluetooth while link encryption is optional.

Pairing of Bluetooth devices is accomplished by creating an initialization key used to authenticate the devices and create a link key for them. Entering a common personal identification number (PIN) in the devices being paired generates the initialization key. The PIN is never sent over the air. By default, the Bluetooth stack responds with no key when a key is requested (it is up to the user to respond to the key request event). Authentication of Bluetooth devices is based upon a challenge-response transaction. Bluetooth allows for a PIN or passkey used to create other 128-bit keys used for security and encryption. The encryption key is derived from the link key used to authenticate the pairing devices. Also, the limited range and fast frequency hopping of the Bluetooth radios make long-distance eavesdropping difficult.

Recommendations are:

- Perform pairing in a secure environment.
- Keep PIN codes private and do not store the PIN codes in the device.
- Implement application-level security.

Bluetooth Profiles

The device supports the Bluetooth services listed.

Table 25 Bluetooth Profiles

Profile	Description
Advanced Audio Distribution Profile (A2DP)	Allows the device to stream stereo-quality audio to a wireless headset or wireless stereo speakers.
Audio/Video Remote Control Profile (AVRCP)	Allows the device to control A/V equipment to which a user has access. It may be used in concert with A2DP.
Dial Up Networking (DUN)	Provides a standard to access the Internet and other dial-up services over Bluetooth.
Generic Attribute Profile (GATT)	Provides profile discovery and description services for Bluetooth Low Energy protocol. It defines how attributes are grouped together into sets to form services.
Generic Access Profile (GAP)	Use for device discovery and authentication.
Human Interface Device Profile (HID)	Allows Bluetooth keyboards, pointing devices, gaming devices and remote monitoring devices to connect to the device.
Hands-Free Profile (HFP)	Allows car hands-free kits to communicate with the device in the car.
Headset Profile (HSP)	Allows a hands-free device, such as a Bluetooth headset, to place and receive calls on the device.
OBject EXchange (OBEX)	Facilitates the exchange of binary objects between devices.
Object Push Profile (OPP)	Allows the device to push and pull objects to and from a push server.
Out of Band (OOB)	Allows exchange of information used in the pairing process. Pairing is completed using the Bluetooth radio, but requires information from the OOB mechanism. Using OOB with NFC enables pairing when devices simply get close, rather than requiring a lengthy discovery process.
Personal Area Network (PAN)	Allows the use of Bluetooth Network Encapsulation Protocol to provide L3 networking capabilities over a Bluetooth link. Only PANU role is supported.

Table 25 Bluetooth Profiles (Continued)

Profile	Description
Phone Book Access Profile (PBAP)	Allows exchange of Phone Book Objects between a car kit and a mobile device to allow the car kit to display the name of the incoming caller; allow the car kit to download the phone book so you can initiate a call from the car display.
Serial Port Profile (SPP)	Allows use of RFCOMM protocol to emulate serial cable connection between two Bluetooth peer devices. For example, connecting the device to a printer.
Service Discovery Protocol (SDP)	Handles the search for known and specific services as well as general services.
Symbol Serial Interface (SSI)	Allows for communication with Bluetooth Imager.

Bluetooth Power States

The Bluetooth radio is off by default.

- **Suspend** - When the device goes into Sleep mode, the Bluetooth radio stays on.
- **Airplane Mode** - When the device is placed in Airplane Mode, the Bluetooth radio is not turned off when the device is connected to a Bluetooth headset or hearing device.

Bluetooth Radio Power

Turn off the Bluetooth radio to save power or if entering an area with radio restrictions (for example, an airplane). When the radio is off, other Bluetooth devices cannot see or connect to the device. Turn on the Bluetooth radio to exchange information with other Bluetooth devices (within range). Communicate only with Bluetooth radios in close proximity.

NOTE: To achieve optimal battery life, turn off radios when not in use.

Enabling Bluetooth

1. Swipe down from the Status bar to open the Notification panel.
2. Touch **Bluetooth** to turn it on.

   The Bluetooth icon turns yellow and Bluetooth is now enabled.

Disabling Bluetooth

1. Swipe down from the Status bar to open the Notification panel.
2. Touch **Bluetooth** to turn it off.

   The Bluetooth icon turns gray when it is disabled.

Discovering Bluetooth Device(s)

The device can receive information from discovered devices without pairing. However, once paired, the device and a paired device exchange information automatically when the Bluetooth radio is on.

1. Ensure that Bluetooth is enabled on both devices.
2. Ensure that the Bluetooth device to discover is in discoverable mode.
3. Ensure that the two devices are within 10 m (32.8 ft) of one another.
4. Swipe down from the Status bar to open the Quick Access panel.
5. Touch and hold **Bluetooth**.
6. Touch **Pair new device**. The device begins searching for discoverable Bluetooth devices in the area and displays them under **Available devices**.
7. Scroll through the list and select a device. The Bluetooth pairing request dialog box appears.
8. Touch **Pair** on both devices.
9. The Bluetooth device is added to the **Paired devices** list and a trusted (“paired”) connection is established.

Changing the Bluetooth Name

By default, the device has a generic Bluetooth name that is visible to other devices when connected.

1. Go to **Settings**.
2. Touch **Connected devices** > **Connection preferences** > **Bluetooth**.
3. If Bluetooth is not on, move the switch to turn Bluetooth on.
4. Touch **Device name**.
5. Enter a name and touch **RENAME**.

Connecting to a Bluetooth Device

Once paired, connect to a Bluetooth device.

1. Go to **Settings**.
2. Touch **Connected devices** > **Connection preferences** > **Bluetooth**.
3. In the list, touch the unconnected Bluetooth device.

   When connected, **Connected** appears below the device name.

Selecting Profiles on the Bluetooth Device

Some Bluetooth devices have multiple profiles.

1. Go to **Settings**.
2. Touch **Connected devices** > **Connection preferences** > **Bluetooth**.
3. In the **Paired Devices** list, touch ⚙ next to the device name.
4. Turn on or off a profile to allow the device to use that profile.

Unpairing a Bluetooth Device

Unpairing a Bluetooth device erases all pairing information.

1. Go to **Settings**.
2. Touch **Connected devices** > **Connection preferences** > **Bluetooth**.
3. In the **Paired Devices** list, touch ⚙ next to the device name.
4. Touch **FORGET**.

Cast

Use **Cast** to mirror the device screen on a Miracast enabled wireless display.

1. Go to **Settings**.
2. Touch **Connected devices** > **Connection preferences** > **Cast**.
3. Touch ⋮ > **Enable wireless display**.

   The device searches for nearby Miracast devices and lists them.
4. Touch a device to begin casting.

Near Field Communication

Near Field Communication/High-Frequency (NFC/HF) RFID is a short-range wireless connectivity technology standard that enables a secure transaction between a reader and a contactless smart card.

The technology is based on ISO/IEC 14443 type A and B, FeliCa (proximity) ISO/IEC 15693 (vicinity) standards, using the HF 13.56 MHz unlicensed band.

The device supports the following operating modes:

- Reader mode.
- Card Emulation mode.

The device also supports Enhanced Contactless Polling (ECP).

Using NFC, the device can:

- Read contactless cards, such as contactless tickets, ID cards, and ePassport.
- Read and write information to contactless cards, such as SmartPosters and tickets, as well as devices with an NFC interface, such as vending machines.
- Read information from supported medical sensors.
- Pair with supported Bluetooth devices such as printers, ring scanners (for example, RS6000), and headsets (for example, HS3100).
- Emulate a contactless card such as a ticket.

The device's NFC antenna is positioned to read NFC cards from the top of the device while the device is being held.

Reading NFC Cards

Read contactless cards using NFC.

1. Launch an NFC-enabled application.
2. Move the card to the NFC antenna on the front of the device.

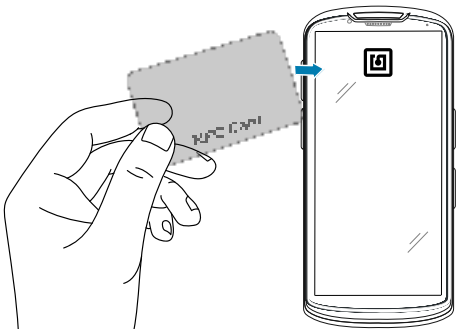

3. Move the device close to the NFC card until it detects the card.
4. Hold the card steadily until the transaction is complete (usually indicated by the application).

Enterprise NFC Settings

Improve NFC performance or increase battery life by selecting which NFC features to use on the device.

- **Card Detection Mode** - Select a card detection mode.
  - **Low** - Increases battery life by lowering the NFC detection speed.
  - **Hybrid** - Provides a balance between NFC detection speed and battery life (default).
  - **Standard** - Provides the best NFC detection speed but reduces battery life (Mandatory setting for ECP).
- **Supported Card Technology** - Select an option to detect only one NFC tag type, increasing battery life but reducing detection speed.
  - **ISO 14443 Type A**
  - **ISO 14443 Type B**
  - **ISO 15693**
  - **FeliCa**
- **NFC Debug Logging** - Use to enable or disable debug logging for NFC.
- **Other NFC settings available with Zebra administrator tools (CSP)**:
  - **Communication speed for Type A and Type B cards and ISO 14443-4 cards** - Higher rate improves transaction speed.
  - **NDEF Support** - Improves card detection speed for non-NDEF cards.
  - **CPU Speed** - Boosts CPU speed during short NFC transactions and improves transaction speed.
  - **Card Emulation** - Enables workaround for Card Emulation interoperability issues.
  - **Reset to Factory Defaults** - Default settings are reset to factory defaults.

Calls

Make a phone call from the Phone app, the Contacts app, or other apps or widgets that display contact information.

NOTE: This section applies to WWAN TC58e devices only.

Emergency Calling

The service provider programs one or more emergency phone numbers, such as 911 or 999, that the user can call under any circumstances, even when the phone is locked, a SIM card is not inserted or the phone is not activated. The service provider can program additional emergency numbers into the SIM card. However, the SIM card must be inserted in the device in order to use the numbers stored on it. Talk to the service provider for additional information.

NOTE: Emergency numbers vary by country. The phone's pre-programmed emergency number(s) may not work in all locations, and sometimes an emergency call cannot be placed due to network, environmental, or interference issues

Audio Modes

The device offers three audio modes for use during phone calls.

- Handset Mode - Switch audio to the receiver at the top front of the device to use the device as a handset. This is the default mode.
- Speaker Mode - Use the device as a speakerphone.
- Headset Mode - Connect a Bluetooth or wired headset to automatically switch audio to the headset.

Bluetooth Headset

Use a Bluetooth headset for audio communication when using an audio-enabled app.

Go to Bluetooth for information on connecting a Bluetooth headset to the device. Set the volume appropriately before putting on the headset. When a Bluetooth headset is connected, the speakerphone is mute.

Adjusting Audio Volume

Use the volume buttons to adjust the phone volume.

- Ring and notification volumes when not in a call.
- Conversation volume during a call.

Making a Call Using the Dialer

Use the dialer tab to dial phone numbers.

1. On the Home screen touch .
2. Touch .
3. Touch the keys to enter the phone number.
4. Touch below the dialer to initiate the call.

	Send audio to the speakerphone.
	Mute the call.
	Display the dial pad.
	Place the call on hold (not available on all services).
	Create a conference call.
	Increase audio level.

5. Touch to end the call.

   If using a Bluetooth headset, additional audio options are available. Touch the audio icon to open the audio menu.

	Audio is routed to the Bluetooth headset.
	Audio is routed to the speakerphone.
	Audio is routed to the earpiece.

Accessing Dialing Options

The dialer provides options to save the dialed number to contacts, send an SMS, or insert pauses and wait into the dial string.

- Enter at least one digit in the dialer, then touch ⋮.
  - **Add 2–sec pause** - Pause the dialing of the next number for two seconds. Multiple pauses are added sequentially.
  - **Add wait** - Wait for confirmation to send the rest of the digits.

Make a Call Using Contacts

There are two ways to make a call using contacts, using the Dialer or using the Contacts app.

Using the Dialer

1. On the Home screen touch .
2. Touch .
3. Touch the contact.
4. Touch to initiate the call.

	Send audio to the speakerphone.
	Mute the call.
	Display the dial pad.
	Place the call on hold (not available on all services).
	Create a conference call.
	Increase audio level.

5. Touch to end the call.

   If using a Bluetooth headset, additional audio options are available. Touch the audio icon to open the audio menu.

	Audio is routed to the Bluetooth headset.
	Audio is routed to the speakerphone.

	Audio is routed to the earpiece.

Using the Contacts App

1. Touch .
2. Touch a contact name.
3. Touch to initiate the call.

Make a Call Using Call History

Call History is a list of all the calls placed, received, or missed. It provides a convenient way to redial a number, return a call, or add a number to Contacts.

Arrow icons beside a call indicate the type of call. Multiple arrows indicate multiple calls.

Table 26 Call Type Indicators

Icon	Description
	Missed incoming call
	Received incoming call
	Outgoing call

Using the Call History List

1. On the Home screen touch .
2. Touch the tab.
3. Touch next to the contact to initiate the call.
4. Touch the contact to perform other functions.
5. Touch to end the call.

Making a Conference Call on GSM

Create a conference phone session with multiple people.

NOTE: Conference Calling and the number of conference calls allowed may not be available on all services. Please check with the service provider for Conference Calling availability.

1. On the Home screen touch .
2. Touch .
3. Touch the keys to enter the phone number.

4. Touch below the dialer to initiate the call.
5. When the call connects, touch .

   The first call is placed on hold.
6. Touch .
7. Touch the keys to enter the second phone number.
8. Touch below the dialer to initiate the call.

   When the call connects, the first call is placed on hold and the second call is active.
9. Touch to create a conference call with three people.
10. Touch to add another call.

    The conference is placed on hold.
11. Touch .
12. Touch the keys to enter another phone number.
13. Touch below the dialer to initiate the call.
14. Touch icon to add the third call to the conference.
15. Touch **Manage conference call** to view all callers.

	Remove a caller from the conference.
	Speak privately with one party during a conference call.
	Include all parties again.

Making a Call Using a Bluetooth Headset

1. Pair the Bluetooth headset with the device.
2. Press the Call button on the Bluetooth headset.
3. Press the Call button on the Bluetooth headset to end the call.

Answering Calls

When receiving a phone call, the **Incoming Call** screen displays the caller ID and any additional information about the caller that is in the **Contacts** app.

NOTE: Not all options are available for all configurations.

To modify phone call settings, on the Home screen touch > > **Settings**.

- Touch **ANSWER** to answer the call or **DECLINE** to send the caller to voice mail.

  If the screen lock is enabled, the user can answer the call without unlocking the device.

- When a call arrives:
  - Touch and slide up to answer the call.
  - Touch and slide down to send the call to voice mail.
  - Touch to open a list of quick text responses. Touch one to send it to the caller immediately.

  When the calls ends, the device remains locked.

  If using a Bluetooth headset when a call arrives, touch the Call button on the Bluetooth headset to answer the call. To end the call press the headset Call button.

  All incoming calls are recorded in the Phone app Call log tab. If you miss a call, you receive a notification. To silence the ringer before answering the call, press the volume down button on the side of device.

Call Settings

To modify phone call settings, on the Home screen, touch > > **Settings**.

NOTE: Not all options are available for all configurations

- **Caller ID & spam**
  - **See caller and spam ID** - Enable to identify business and spam numbers.
  - **Filter spam calls** - Enable to prevent suspected spam calls from disturbing you.
- **Accessibility**
  - **Hearing aids** - Select to enable hearing aid compatibility.
- **Assisted dialing** - Predicts and adds a country code when you travel abroad and make a call.
  - **Default home country** - Select a home country. **Automatically detected** is the default setting.
- **Blocked numbers**
  - **Add a number** - Add a phone number to block.
  - **Unknown** - Enable to block calls from unidentified callers.

- **Calling accounts**
  - **Settings** - Touch a mobile provider to display options for that provider.
    - **Fixed Dialing Numbers** - Set only to allow the phone to dial the phone number(s) or area code(s) specified in a Fixed Dialing list.
    - **Call forwarding** - Set to forward incoming calls to a different phone number.

NOTE: Call Forwarding may not be available on all networks. Check with the service provider for availability.

  - **Vibrating for outgoing call accepted** - Enable vibrating mode for outgoing call accepted.
  - **SIP accounts** - Choose to receive internet calls for accounts added to the device, view or change SIP accounts, or add an internet calling account.
  - **Use SIP calling** - Set to **For all calls** or **Only for SIP calls**.
  - **Receive incoming calls** - Enable to allow incoming calls.
  - **Wi-Fi calling** - Enable to allow Wi-Fi calling and set the Wi-Fi calling preference.
  - **Call barring** - Set to block certain types of incoming or outgoing calls.
- **Display options**
  - **Sort by** - Set to **First name** (default) or **Last name**.
  - **Name format** - Set to **First name first** (default) or **Last name first**.
  - **Choose theme** - Set to **Light**, **Dark**, or **System default** (default).
- **Nearby places** - Use your location to find nearby places that match your search query from the phone app.
- **Quick responses** - Touch to edit quick responses to use instead of answering a call.
- **Sounds and vibrations** - Touch or slide to edit the general sound settings for the device.

- **Voicemail** - Configure voicemail settings.
  - **Notifications** - Configure voicemail notification settings.
    - **Show notifications** - Enable or disable voicemail notifications.
    - **Default** - Based on your phone settings, this notification setting may ring or vibrate.
    - **Silent** - Silence the sound and vibration notifications when a voicemail is received.
    - **Pop on screen** - Display notifications as a banner from the top of the screen when a device is unlocked.
    - **Sound** - Select a sound to play for notifications from this app.
    - **Vibration** - Allow notifications to vibrate the device.
    - **Lock screen** - Notification settings on the lock screen.
      - **Show all notification content** (default)
      - **Show sensitive content only when unlocked**
      - **Don't show notifications at all**
    - **Blink light** - Allow notifications with the blue LED light.
    - **Show notification dot** - Allow notifications to add a notification dot to the app icon.
    - **Override Do Not Disturb** - Allow notifications to interrupt when Do Not Disturb is enabled.
  - **Advanced Settings**
    - **Service** - Set the service provider or other provider for voicemail service.
    - **Setup** - Select to update the phone number used to access voicemail.
- **Accessibility**
  - **Hearing aids** - Select to enable hearing aid compatibility.
- **Caller ID announcement** - The caller's name and number are read out loud for incoming calls.
- **Flip to Silence** - To silence an incoming call, place the device face down on a flat surface.

Accessories

The following table lists the accessories available for the device.

Accessory	Part Number	Description
Cradles		
1-Slot Charge Only Cradle	CRD-NGTC5-2SC1B	Includes power supply (PWR-BGA12V50W0WW), DC cable (CBL-DC-388A1-01), and shims (SHIM-CRD-NGTC5). Country-specific AC cable is sold separately.
1-Slot USB/Ethernet Cradle	CRD-NGTC5-2SE1B	Includes power supply (PWR-BGA12V50W0WW), DC cable (CBL-DC-388A1-01), and shims (SHIM-CRD-NGTC5). AC cable sold separately. **NOTE:** The USB-Ethernet Adapter is sold separately.
4-Slot Battery Charger Kit	SAC-NGTC5TC7-4SCHG-01	Includes power supply (PWR-BGA12V50W0WW) and DC cable (CBL-DC-388A1-01). Country-specific AC cable is sold separately.
4-Slot Device Charge Only Cradle and Spare Battery Charger	CRD-NGTC5-5SC4B	Includes four-pack of shims (SHIM-CRD-NGTC5), power supply (PWR-BGA12V108W0WW), and DC cable (CBL-DC-381A1-01). AC cable sold separately.
5-Slot Charge Only Cradle Kit	CRD-NGTC5-5SC5D	Includes five-pack of shims (SHIM-CRD-NGTC5), power supply (PWR- BGA12V108W0WW) and DC cable (CBL-DC- 381A1-01). Country-specific AC cable is sold separately.
5-Slot Ethernet Cradle Kit	CRD-NGTC5-5SE5D	Includes five-pack of shims (SHIM-CRD-NGTC5), power supply (PWR- BGA12V108W0WW) and DC cable (CBL-DC- 381A1-01). Country-specific AC cable is sold separately.
Wireless Charging Vehicle Cradle	CRD-TC58-WCVC-01	A wireless charging vehicle cradle. For windshield mounting, the suction mount RAM-B-166U is required (sold separately). **NOTE:** Must use with a wireless charging battery (sold separately); for TC58e premium configurations only.
Connect Cradles (Workstation)	CRD-NTC5X-1SNWS-01	Connects the device to an external monitor and multiple peripherals. Includes HDMI, Ethernet, and USB-A (x4) ports.

Accessory	Part Number	Description
Connect Cradles (Point of Sale)	CRD-NTC5X-1SNHP-01	Connects the device to an external monitor and multiple peripherals. Includes HDMI, Ethernet, USB-A (x4), 24VDC Powered USB (x1), 12V Powered USB (x2) ports.
USB Cigarette Lighter Adapter Plus	CHG-AUTO-USB1-01	Contains a switch-mode power converter with a voltage-controlled, current-limited output for use with a device. Use with USB-C Cable (CBL-TC5X-USBC2A-01).
Vehicle Holder	CRD-TC5NG-NCCD-01	A vehicle mount to hold a device.
Cradle Mount	BRKT-SCRD-SMRK-01	Mounts the 5-Slot Charge Only Cradle, 5-Slot Ethernet Cradle, and 4-Slot Battery Charger to a wall or rack.
Cradle Cup Replacement	CRDCUP-NGTC5-01	Replacement cup for cradle with two shims.
USB-Ethernet Adapter	KT-TC51-ETH1-01	Provides USB and Ethernet communication with the 1-Slot USB/Charge Only Cradle Kit.
Batteries		
Standard Battery	BTRY-NGTC5TC7-44MA-01	Standard capacity 4680 mAh battery.
Standard Battery BLE	BTRY-NGTC5TC7-44MABLE-01	Standard capacity 4680 mAh BLE battery.
High Capacity Battery	BTRY-NGTC5TC7-66MA-01	High capacity 7000 mAh battery.
Wireless Charging Battery	BTRY-NGTC5TC7-44MAWC-01	Wireless charging 4680 mAh battery. **NOTE:** For TC58e premium configurations only.
Payment Battery	BTRY-TC5X-PYMT	Charging 4680 mAh battery. Allows integration to PD20 credit card readers.
Charge and Communication Cables		
USB-C Communication and Charge Cable	CBL-TC5X-USBC2A-01	Provides UBC-A to USB-C communication and power to the device.
Audio Accessories		
USB-C Headset	HDST-USBC-PTT1-01	USB-C headset with PTT and volume control for Workforce Communication. Provides wired communication with the device.
Rugged Wired Headset (Over-The-Head Headband)	HS3100-OTH	Includes HS3100 Boom Module and HSX100 OTH Headband Module. Provides wired communication with the device.
Rugged Wired Headset (Behind-The-Neck Headband Left)	HS3100-BTN-L	Includes HS3100 Boom Module (HS3100-BOOM-01) and HSX100 behind-the-neck headband left module (HSX100-BTN-L-HB-01). Provides wired communication with the device.

Accessory	Part Number	Description
Rugged Wired Headset (Over-The-Head Headband)	HS3100-OTH-SB	Includes HS3100 Shortened Boom Module and HSX100 OTH headband module. Provides wired communication with the device.
Rugged Wired Headset (Behind-The-Neck Headband)	HS3100-BTN-SB	Includes HS3100 Shortened Boom Module and HSX100 BTN headband module. Provides wired communication with the device.
Shortened Boom Module	HS3100-SBOOM-01	Includes microphone boom, battery, and windscreen.
Miscellaneous		
Rugged Boot	SG-NGTC5EXO1-01	Provides additional protection for the device.
Trigger Handle	TRG-NGTC5-ELEC-01	Adds gun-style handle with a scanner trigger for comfortable and productive scanning. Requires Rugged Boot.
Soft Holster	SG-NGTC5TC7-HLSTR-01	Use to hold the device on the hip. Accepts devices with and without the Rugged Boot and Trigger Handle.
Hand Strap	SG-NGTC5TC7-HDSTP-03	Replacement hand strap with hand strap mounting clip (3-pack).
Wrist Mount Adapter	SG-NGTC5-WMADP1-01	Wrist mount adapter, black, dial strap length 191 mm (7.5 in.).
	SG-NGTC5-WMADP1-02	Wrist mount adapter, black, dial strap length 265 mm (10 in.).
Tether	SG-TC5NGTC7NG-TETHR-03	Stylus tether connects stylus to device or hand strap (3-pack).
Stylus	SG-STYLUS-TCX-MTL-03	Stylus for touchscreen use.
Power Supplies		
Power Supply	PWR-BGA12V50W0WW	Provides power to the 1-Slot USB Charge Cradle and 4-Slot Spare Battery Charger. Requires AC line cord and DC line cord.
Power Supply	PWR-BGA12V108W0WW	Provides power to the 4-Slot Charge Only Cradle with Battery Charger, 5-Slot Charge Only Cradle and the 5-Slot Ethernet Cradle. Requires DC Line Cord, p/n 50–16002–029R and country specific three wire grounded AC line cord sold separately.
Power Supply	PWR-WUA5V12W0US	Provides 5 VDC, 2.5 A power to the Rugged Charge/USB cable. Includes plug adapter for use in the United States.
Power Supply	PWR-WUA5V12W0GB	Provides 5 VDC, 2.5 A power to the Rugged Charge/USB cable. Includes plug adapter for use in the United Kingdom.
Power Supply	PWR-WUA5V12W0EU	Provides 5 VDC, 2.5 A power to the Rugged Charge/USB cable. Includes plug adapter for use in the European Union.

Accessory	Part Number	Description
Power Supply	PWR-WUA5V12W0AU	Provides 5 VDC, 2.5 A power to the Rugged Charge/USB cable. Includes plug adapter for use in Australia.
Power Supply	PWR-WUA5V12W0CN	Provides 5 VDC, 2.5 A power to the Rugged Charge/USB cable. Includes plug adapter for use in China.
Power Supply	PWR-WUA5V12W0IN	Provides 5 VDC, 2.5 A power to the Rugged Charge/USB cable. Includes plug adapter for use in India.
Power Supply	PWR-WUA5V12W0KR	Provides 5 VDC, 2.5 A power to the Rugged Charge/USB cable. Includes plug adapter for use in Korea.
Power Supply	PWR-WUA5V12W0BR	Provides 5 VDC, 2.5 A power to the Rugged Charge/USB cable. Includes plug adapter for use in Brazil.
DC Line Cord	CBL-DC-381A1-01	Provides power from the power supply (PWR-BGA12V108W0WW) to the 4-Slot Charge Only Cradle with Battery Charger, 5-Slot Charge Only Cradle and 5-Slot Ethernet Cradle.
DC Line Cord	CBL-DC-388A1-01	Provides power from the power supply (PWR-BGA12V50W0WW) to the 2-Slot USB/Charge Only Cradle and 4-Slot Battery Charger.
2-way DC Cable	CBL-DC-523A1-01	Connects one power supply (PWR-BGA12V108W0WW) to two 4-Slot Battery Chargers.
US AC Line Cord	23844-00-00R	Provide power to power supplies.

Inserting a TC5X Shim into a Cradle

Each cradle cup has a shim that can be inserted before inserting the device. Shims allow for devices without the rugged boot to charge in a cradle.

1. To install the shim, insert the shim straight down into the cradle cup until it clicks in place.

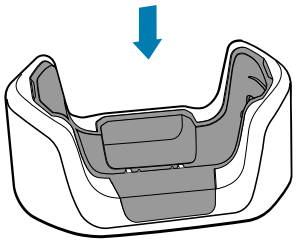

2. To remove the shim, pinch both sides in and pull up.

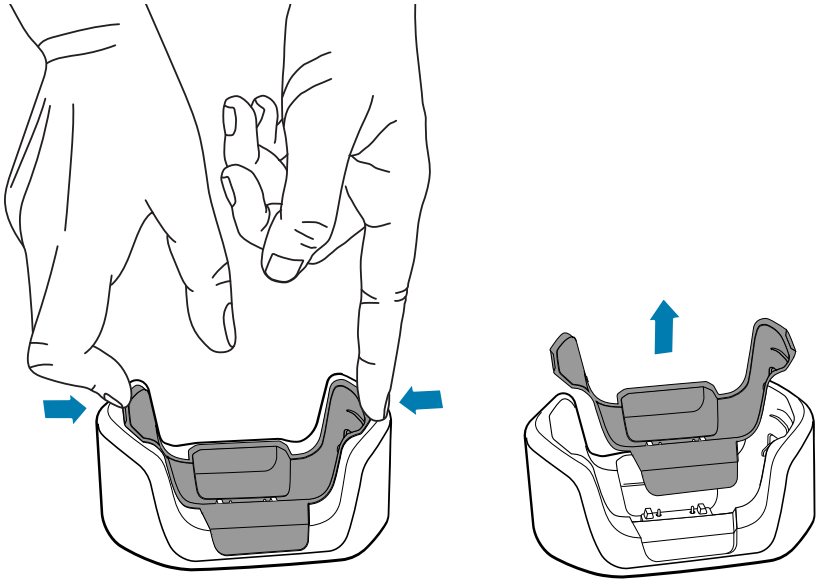

Charging the Device in a Cradle

CAUTION: Ensure that you follow the guidelines for battery safety described in Battery Safety Guidelines.

NOTE: If the device has a Rugged Boot, ensure the shim in the cradle cup has been removed.

IMPORTANT: By default, the device includes an interface connector. If the interface connector is removed for USB Type-C cable connectivity, it must be replaced before charging or receiving an Ethernet IP address if placed in a cradle.

1. Insert the device into the slot to begin charging.

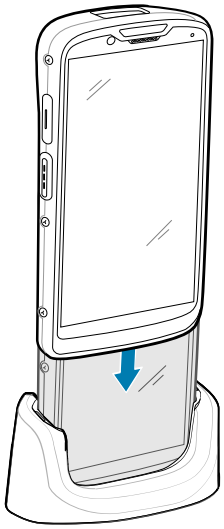

2. Ensure that the device is properly seated.

1-Slot Charge Only Cradle

This USB cradle provides power, spare battery charging, and host communications.

CAUTION: Ensure that you follow the guidelines for battery safety described in Battery Safety Guidelines.

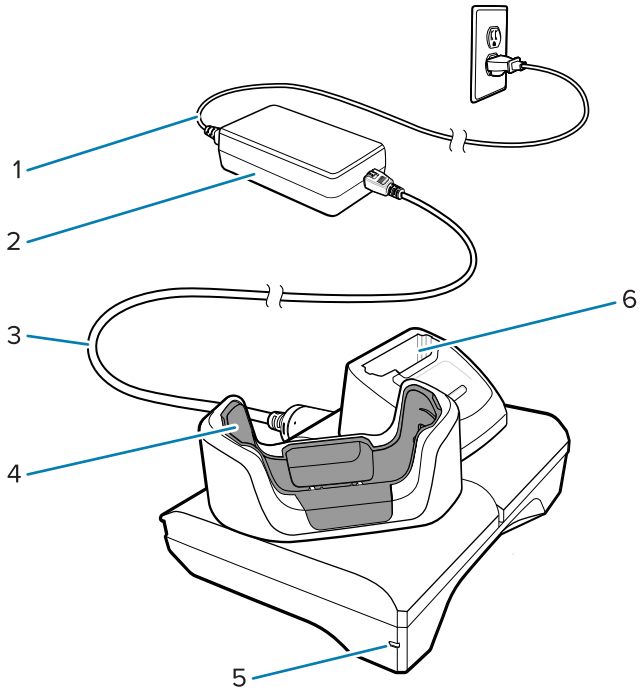

1	AC line cord
2	Power supply
3	DC line cord
4	Device charging slot
5	Power LED
6	Spare battery charging slot

1-Slot Charger Only Cradle Setup

The 1-Slot Charge Only Cradle charges one device and one spare battery.

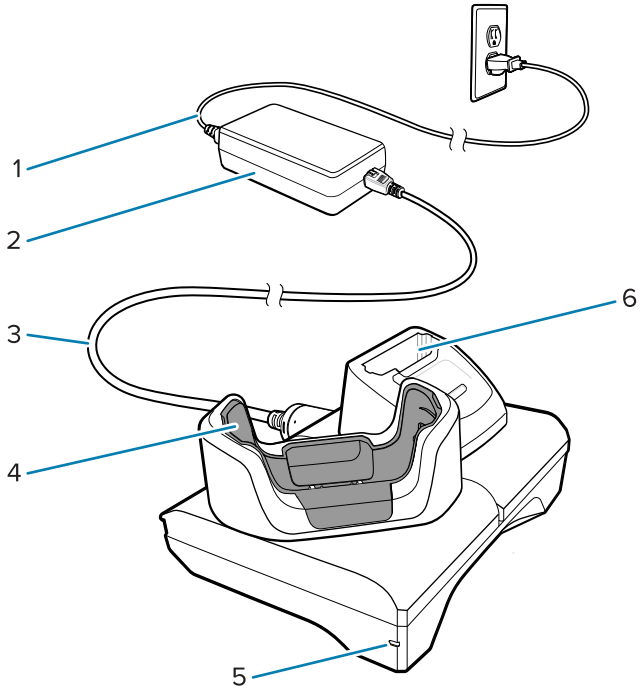

Charging the Spare Battery with the 1-Slot Charge Only Cradle

1. Insert the battery into the right slot to begin charging.

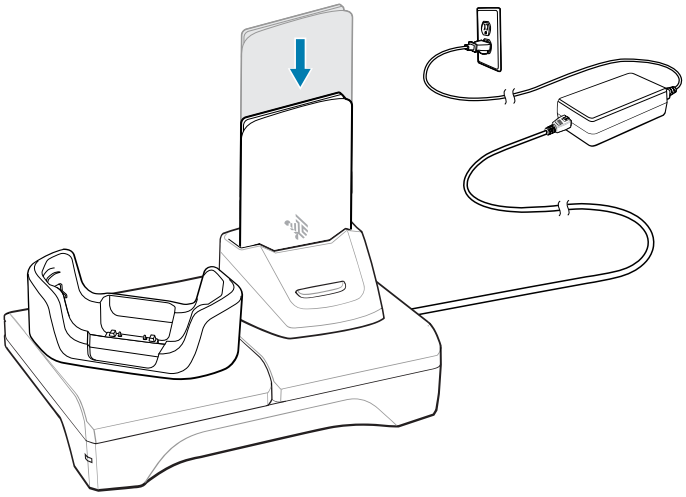

2. Ensure that the battery is seated properly.

1-Slot USB/Ethernet Charge Cradle

The 1-Slot USB/Ethernet Charging Cradle charges one device and one spare battery while also connecting a device to the Ethernet network.

CAUTION: Ensure that you follow the guidelines for battery safety described in Battery Safety Guidelines.

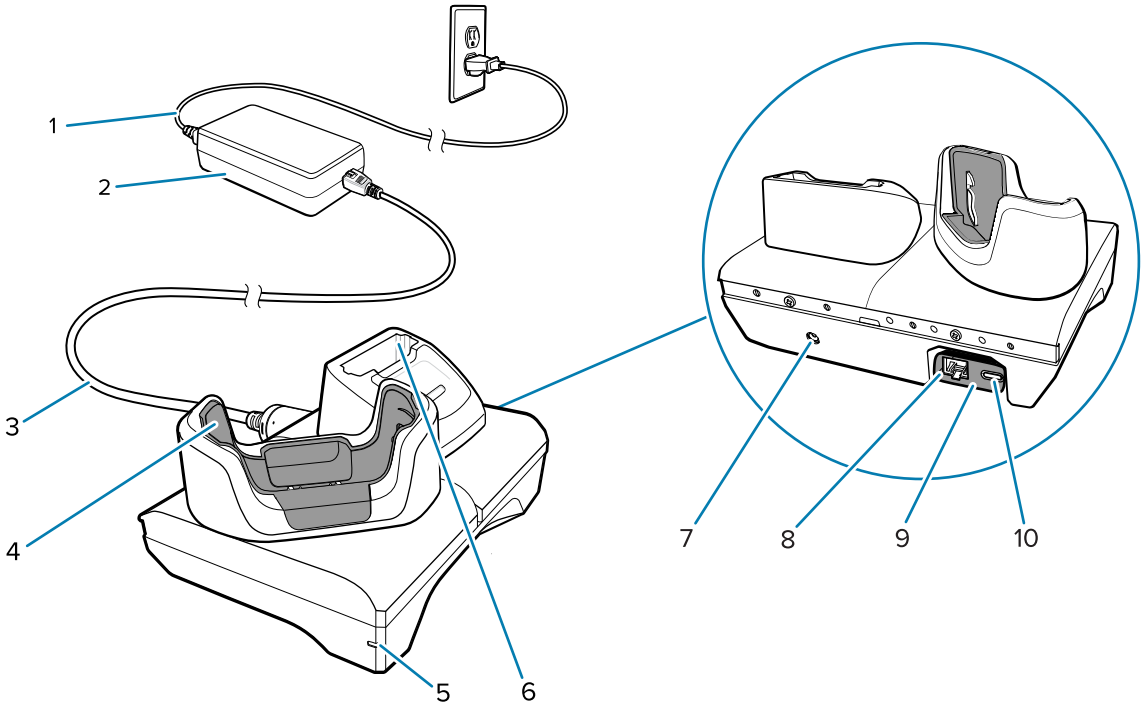

1	AC line cord
2	Power supply
3	DC line cord
4	Device charging slot
5	Power LED
6	Spare battery charging slot
7	DC line cord input
8	Ethernet port (on USB to Ethernet module kit)
9	USB to Ethernet module kit
10	USB port (on USB to Ethernet module kit)

NOTE: The USB to Ethernet module kit (KT-TC51-ETH1-01) connects via a single-slot USB charger.

1-Slot USB/Ethernet Charging Cradle Setup

This section goes over setting up the 1-Slot USB/Ethernet Charging Cradle.

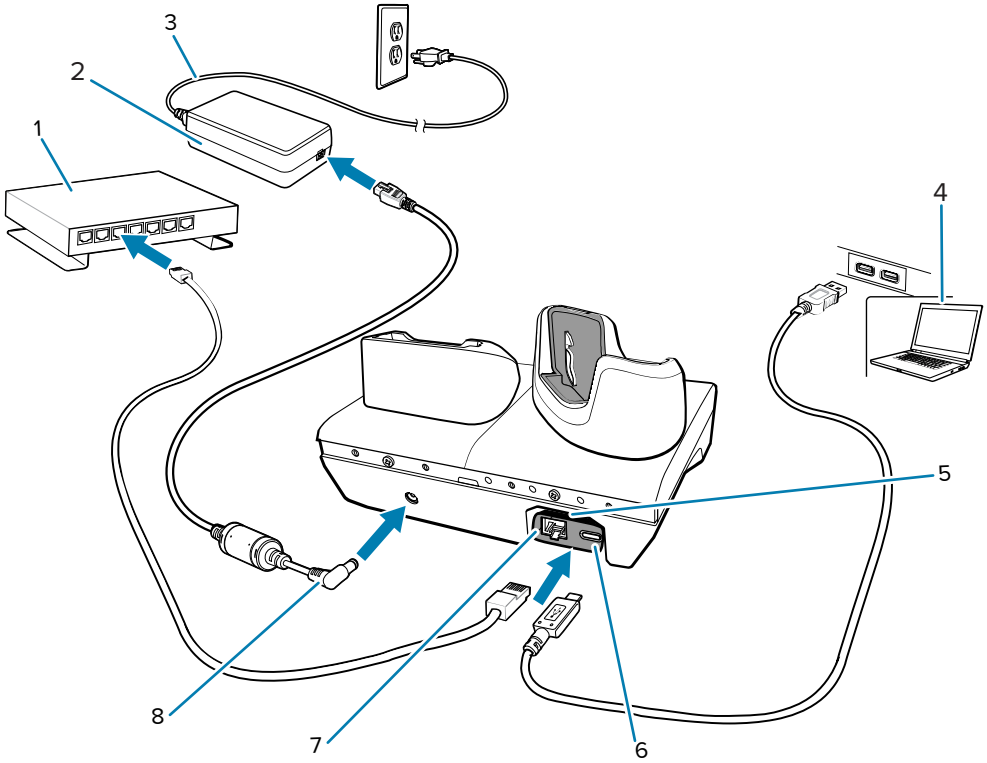

1	Ethernet switch
2	Power supply
3	AC line cord
4	Host computer
5	USB to Ethernet module kit (sold separately)
6	USB port (on USB to Ethernet module kit)
7	Ethernet port (on USB to Ethernet module kit)
8	DC line cord

NOTE: The USB/ETHERNET adapter (KT-TC51-ETH1-01) connects via a single-slot USB charger.

Charging the Spare Battery with the 1-Slot Charge Only Cradle

1. Insert the battery into the right slot to begin charging.

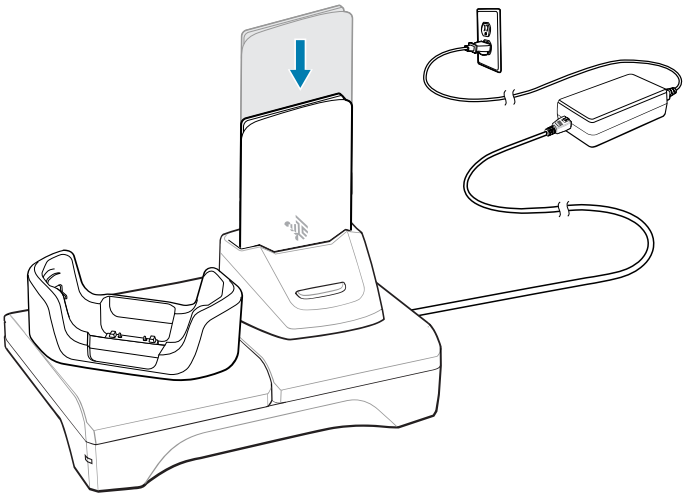

2. Ensure that the battery is seated properly.

Ethernet Settings

The following settings can be configured when using Ethernet communication:

- Proxy Settings
- Static IP

Configuring Ethernet Proxy Setting

This device includes Ethernet cradle drivers. After inserting the device, configure the Ethernet connection.

1. Go to **Settings**.
2. Touch **Network & internet** > **Ethernet**.
3. Slide the switch to the **ON** position.
4. Place the device into the Ethernet cradle slot.
5. Touch and hold **eth0** until the menu displays.
6. Touch **Modify Proxy**.
7. Touch the **Proxy** list and select **Manual**.
8. In the **Proxy hostname** field, enter the proxy server address.
9. In the **Proxy port** field, enter the proxy server port number.
10. In the **Bypass proxy for** field, enter addresses for websites that do not require to go through the proxy server.

NOTE: Do not use spaces or carriage returns between addresses when entering proxy addresses in the **Bypass proxy for** field.

11. Use the separator “|” between addresses.

12. Touch **MODIFY**.
13. Touch the Home button.

Configuring Ethernet Static IP Address

This device includes Ethernet cradle drivers. After inserting the device, configure the Ethernet connection.

1. Go to **Settings**.
2. Touch **Network & internet** > **Ethernet**.
3. Slide the switch to the **ON** position.
4. Place the device into the Ethernet cradle slot.
5. Touch **eth0**.
6. Touch **Disconnect**.
7. Touch **eth0**.
8. Touch the **IP** settings list and select **Static**.
9. In the **IP address** field, enter the proxy server address.
10. If required, in the **Gateway** field, enter a gateway address for the device.
11. If required, in the **Netmask** field, enter the network mask address.
12. If required, in the **DNS** address fields, enter a Domain Name System (DNS) addresses.
13. Touch **CONNECT**.
14. Touch the Home button.

5-Slot Charge Only Cradle

CAUTION: Ensure that you follow the guidelines for battery safety described in Battery Safety Guidelines.

The 5-Slot Charge Only Cradle:

- Provides 5.0 VDC power for operating the device.
- Simultaneously charges up to five devices or up to four devices and four batteries using the 4-slot battery charger adapter.
- Contains a cradle base and cups that can be configured for various charging requirements.

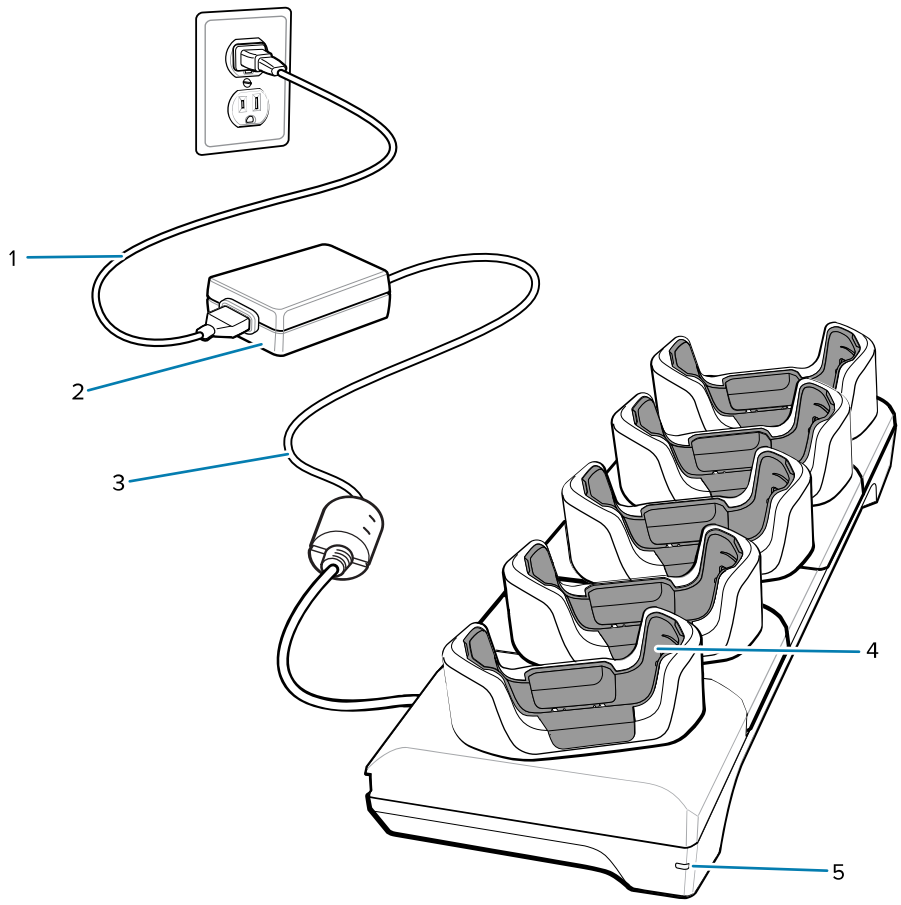

1	AC line cord
2	Power supply
3	DC line cord
4	Device charging slot with shim
5	Power LED

5-Slot Charge Only Cradle Setup

The 5-Slot Charge Only Cradle provides charging for up to five devices.

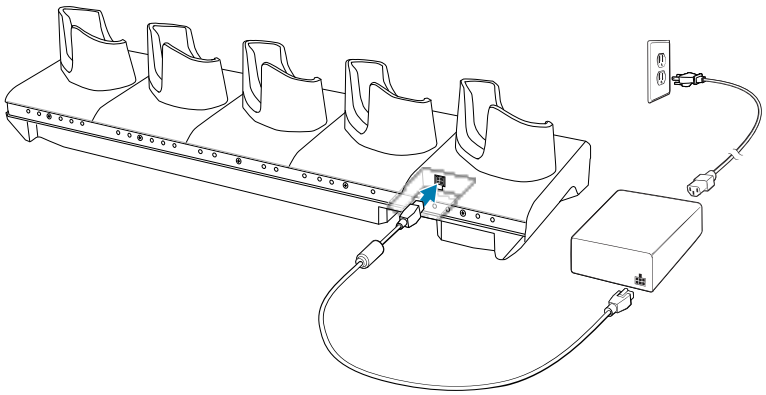

Installing the 4-Slot Battery Charger

Install the 4-Slot Battery Charger onto a 5-Slot Charge Only Cradle base. This provides a total of four device charging slots and four battery charging slots.

NOTE: The Battery Charger must be installed in the first slot only.

1. Remove power from the cradle.

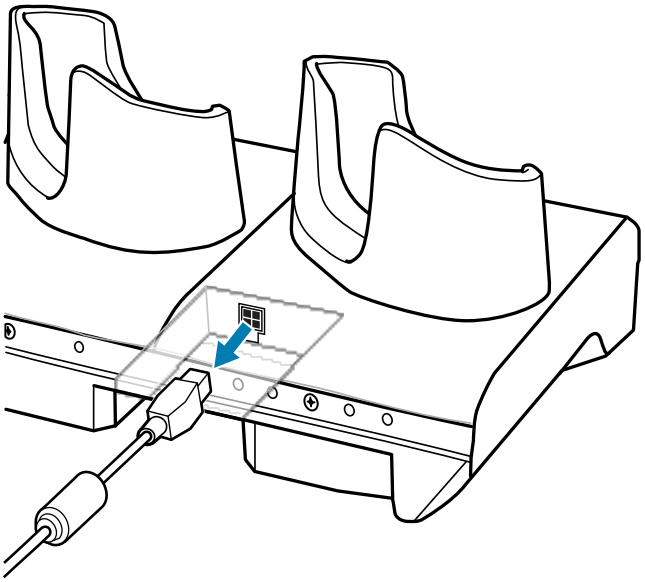

2. Using a Phillips screwdriver, remove the screw securing the cup to the cradle base.

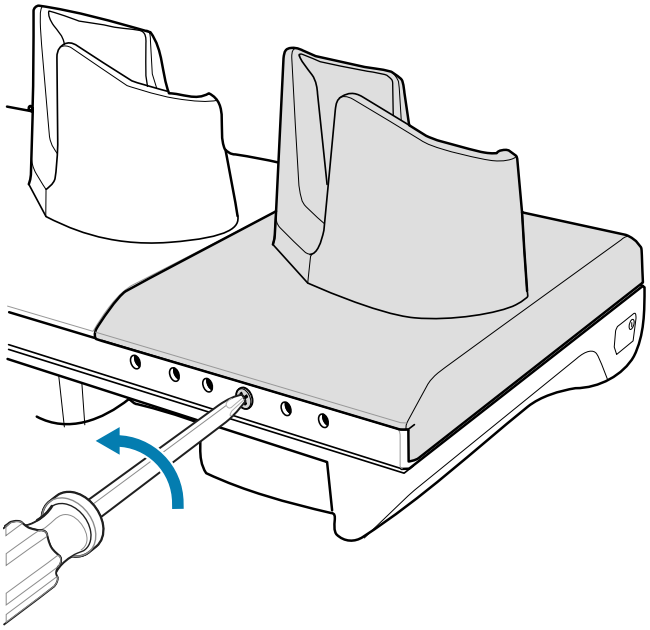

3. Slide the cup to the front of the cradle.

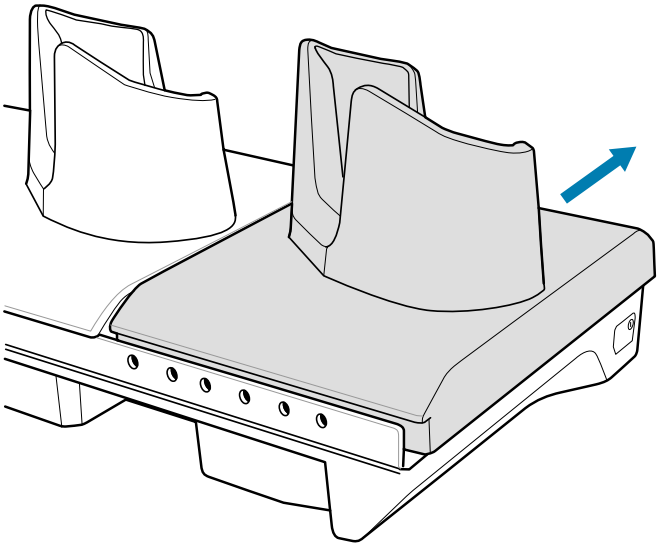

4. Carefully lift the cup up to expose the cup power cable.

5. Disconnect the cup power cable.

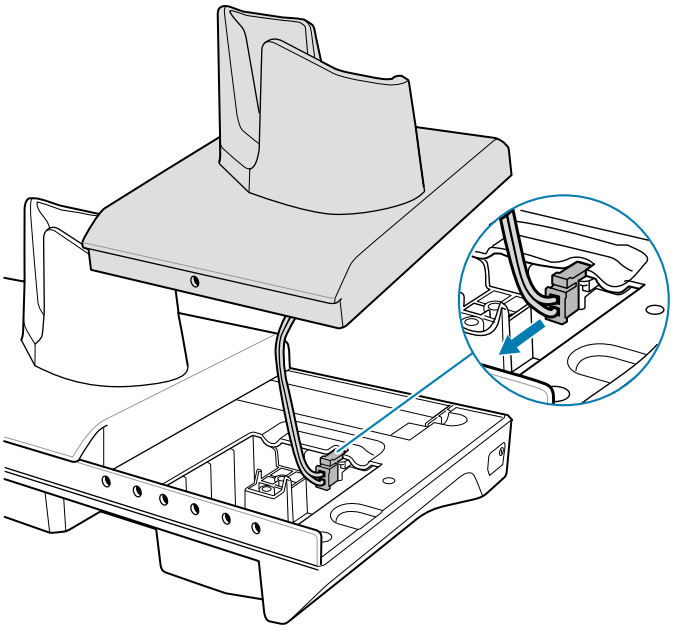

NOTE: Place the power cable into the adapter to avoid pinching the cable.

6. Connect the Battery Adapter power cable to the connector on the cradle.

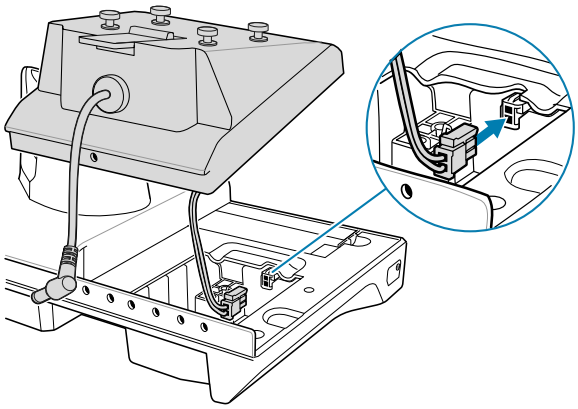

7. Place the adapter onto the cradle base and slide it toward the rear of the cradle.

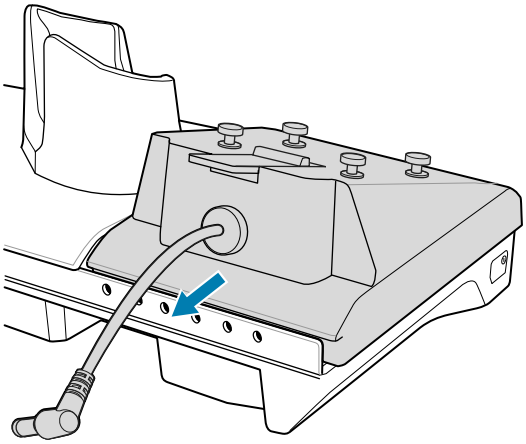

8. Using a Phillips screwdriver, secure the adapter to the cradle base with a screw.

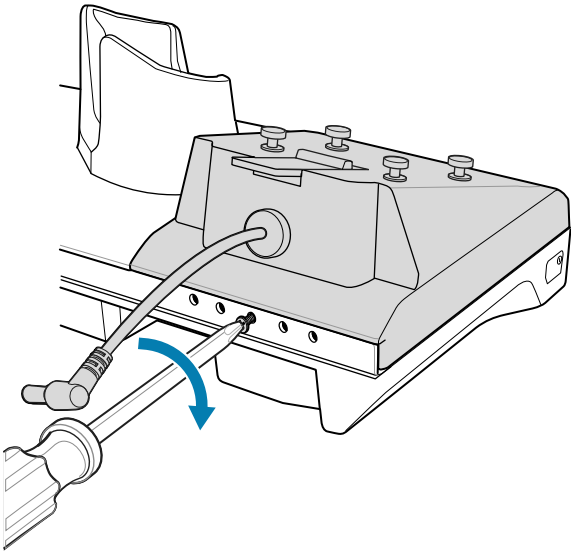

9. Align mounting holes on the bottom of the 4-Slot Battery Charger with the stubs on the Battery Adapter.

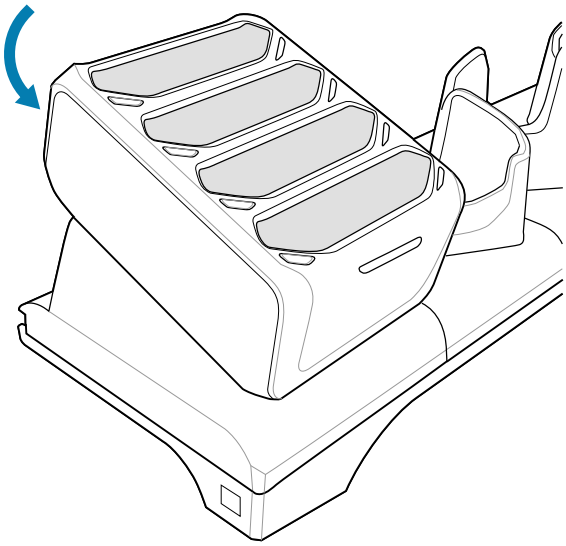

10. Slide the 4-Slot battery charger down toward the front of the cradle.
11. Connect the output power plug to the power port on the 4-Slot Battery Charger.

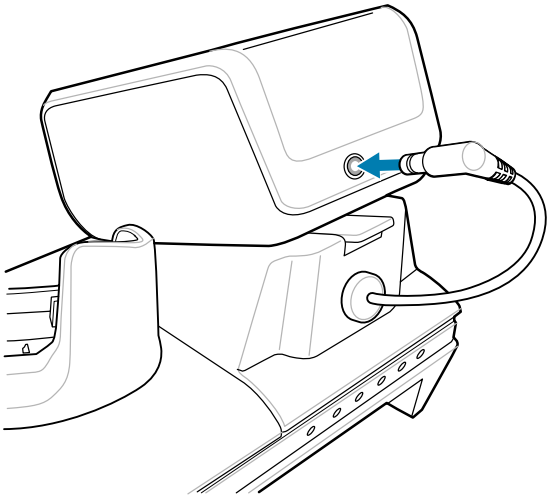

12. Reconnect the power to the cradle.

Removing the 4-Slot Battery Charger

If necessary, remove the 4-Slot Battery Charger from the 5-Slot Charge Only Cradle base.

1. Disconnect the output power plug from the 4-Slot Battery Charger.

2. At the back of the cup, press down on the release latch.

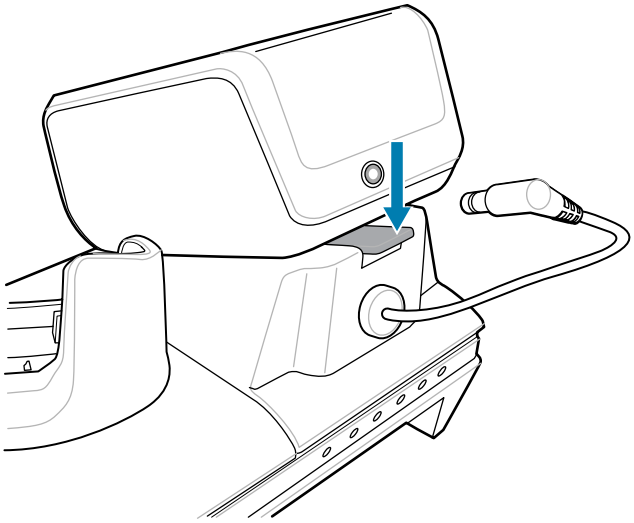

3. Slide the 4-Slot Battery Charger toward the front of the cradle.
4. Lift the 4-Slot Battery Charger off the cradle cup.

5-Slot Ethernet Cradle

CAUTION: Ensure that you follow the guidelines for battery safety described in Battery Safety Guidelines.

The 5-Slot Ethernet Cradle:

- Provides 5.0 VDC power for operating the device.
- Connects up to five devices to an Ethernet network.
- Simultaneously charges up to five devices or up to four devices and four batteries using the 4-slot battery charger adapter.

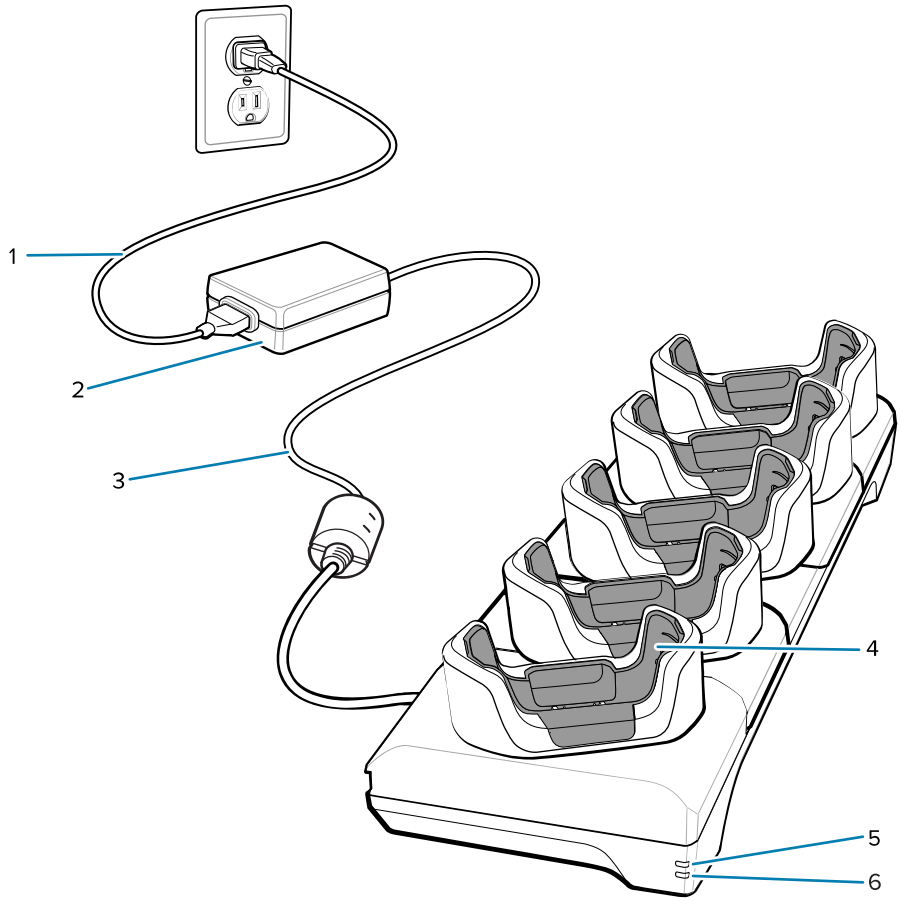

1	AC line cord
2	Power supply
3	DC line cord
4	Device charging slot
5	1000Base-T LED
6	10/100Base-T LED

5-Slot Ethernet Cradle Setup

The 5-Slot Ethernet Cradle provides charging for up to five devices.

Figure 28 5-Slot Ethernet Cradle

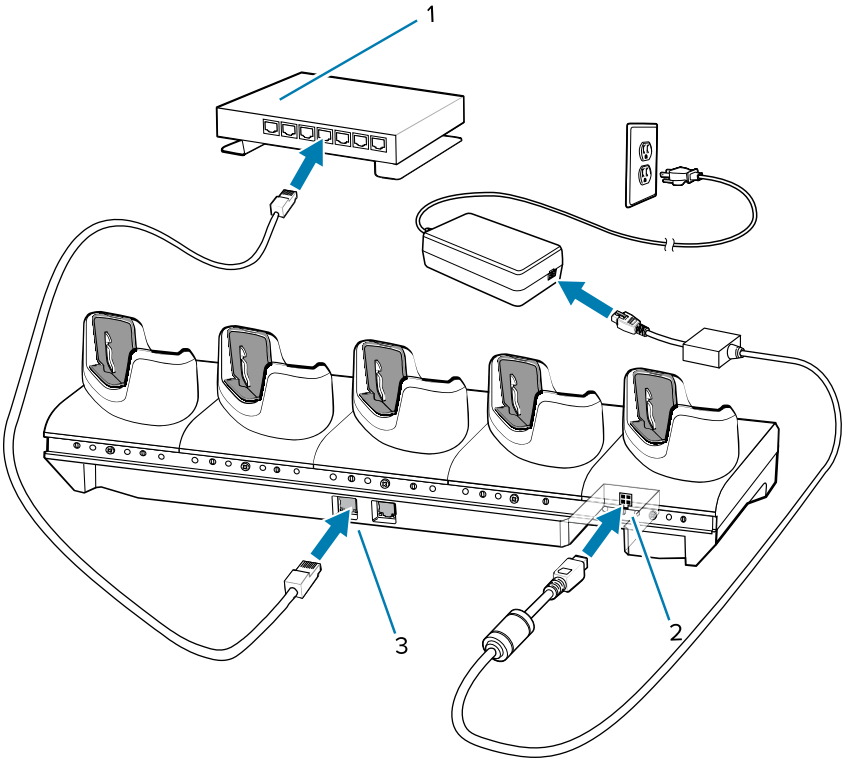

1	Ethernet switch
2	Power supply
3	Ethernet port

Daisy-Chaining Ethernet Cradles

Daisy-chain up to ten 5-Slot Ethernet cradles to connect several cradles to an Ethernet network.

Use either a straight or crossover cable.

NOTE: Do not attempt to daisy-chain when the main Ethernet connection to the first cradle is 10 Mbps, as throughput issues may occur.

1. Connect one end of an Ethernet cable to one of the ports on the switch (1) and the other end to the primary port (2) of the first cradle.

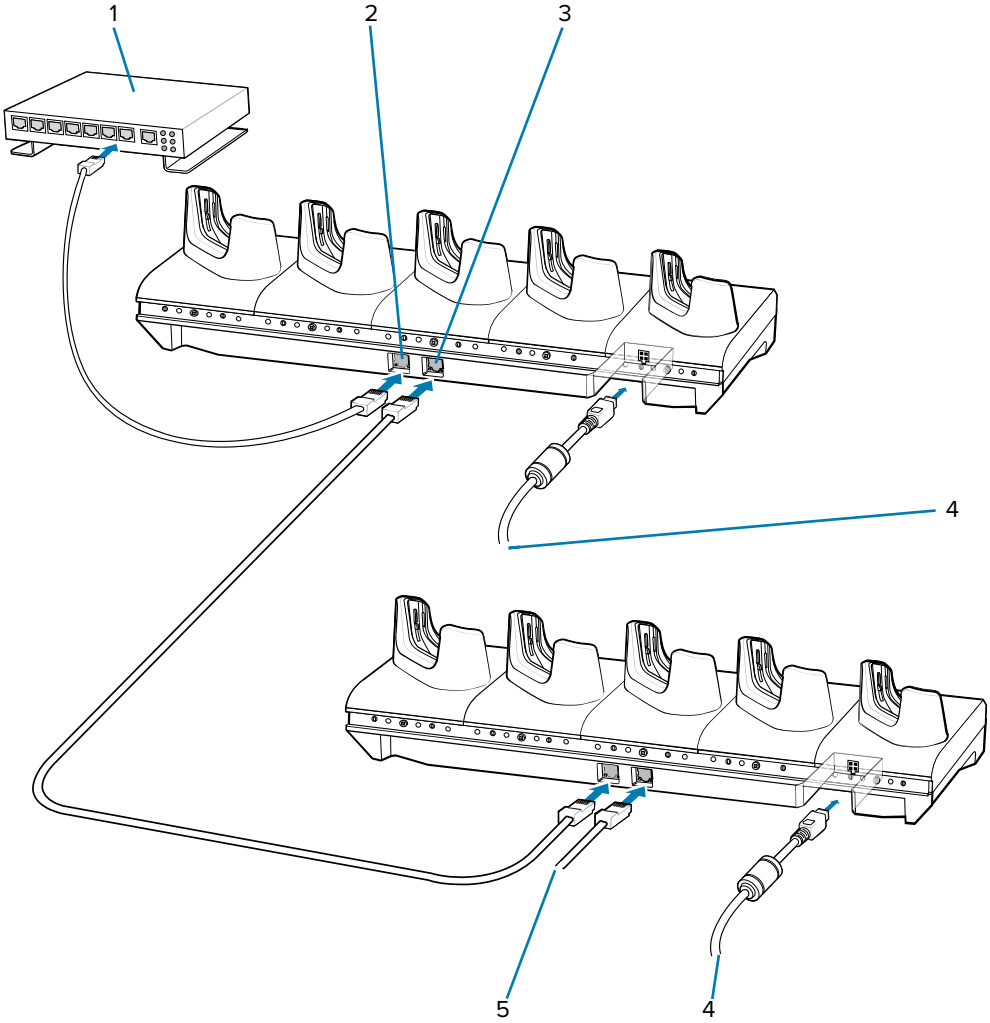

1	Ethernet switch
2	Primary port
3	Secondary port
4	To power supply
5	To next cradle

2. Connect an Ethernet cable to the secondary port (3) of the first cradle.
3. Connect the other end of the Ethernet cable to the primary port of the next 5-Slot Ethernet cradle.

   The two cradles are connected.
4. Repeat steps 2 and 3 to connect additional cradles.
5. Connect power (4) to each cradle.

Installing the 4-Slot Battery Charger

Install the 4-Slot Battery Charger onto a 5-Slot Charge Only Cradle base. This provides a total of four device charging slots and four battery charging slots.

NOTE: The Battery Charger must be installed in the first slot only.

1. Remove power from the cradle.

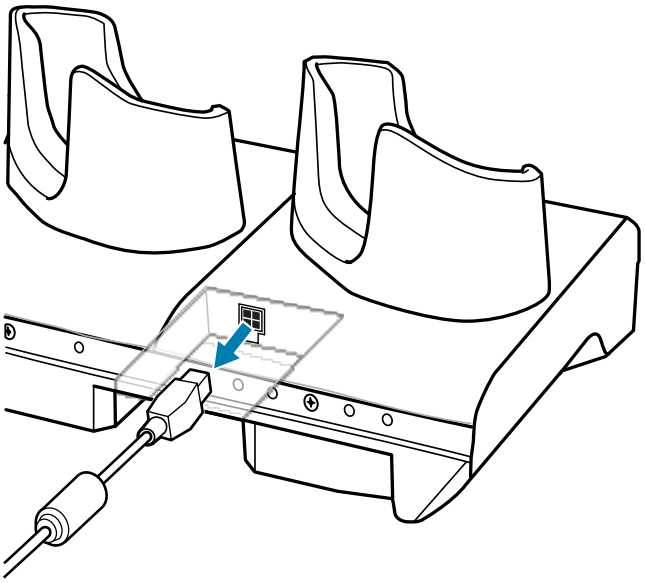

2. Using a Phillips screwdriver, remove the screw securing the cup to the cradle base.

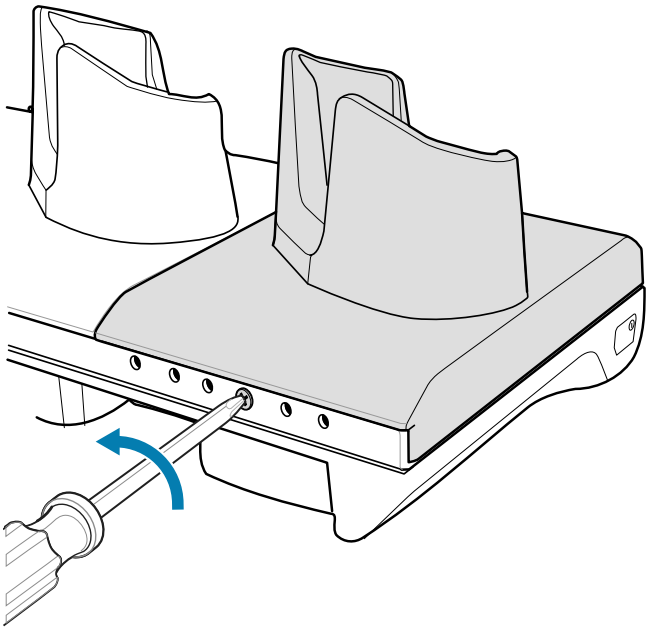

3. Slide the cup to the front of the cradle.

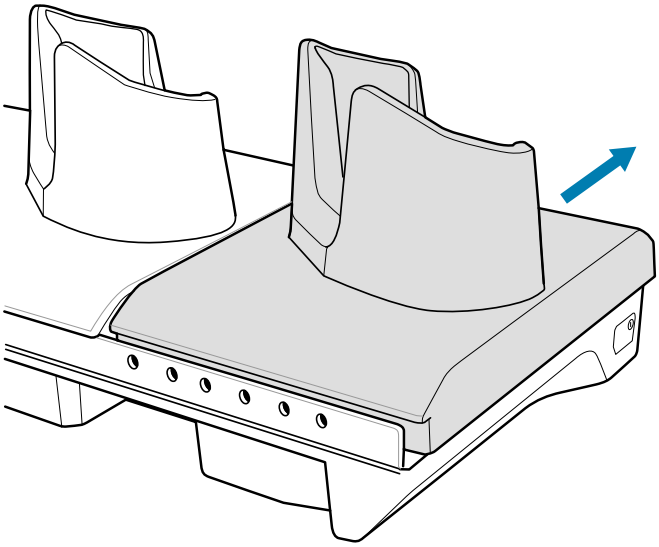

4. Carefully lift the cup up to expose the cup power cable.
5. Disconnect the cup power cable.

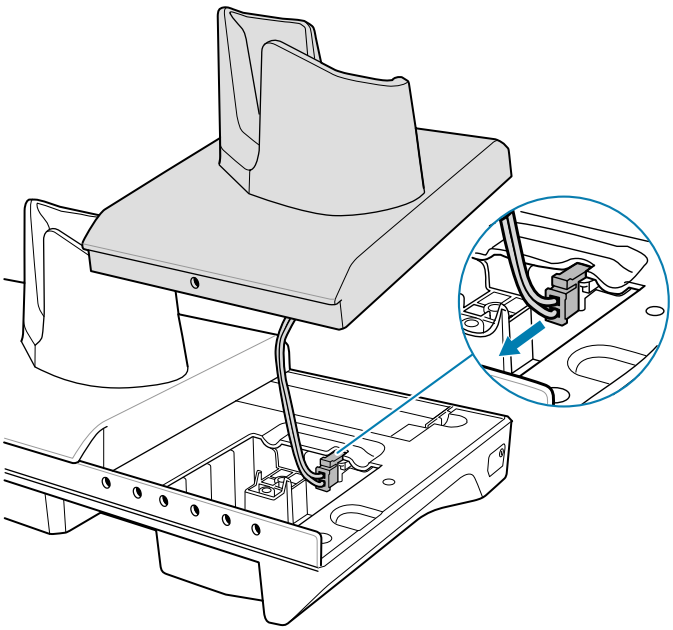

NOTE: Place the power cable into the adapter to avoid pinching the cable.

6. Connect the Battery Adapter power cable to the connector on the cradle.

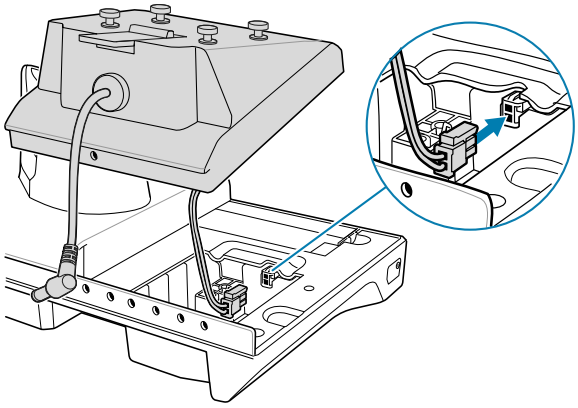

7. Place the adapter onto the cradle base and slide it toward the rear of the cradle.

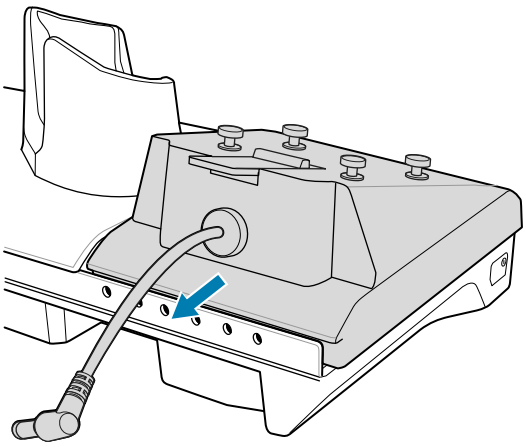

8. Using a Phillips screwdriver, secure the adapter to the cradle base with a screw.

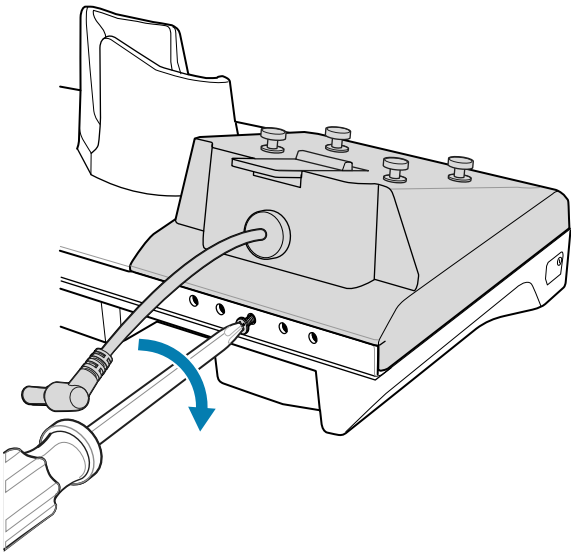

9. Align mounting holes on the bottom of the 4-Slot Battery Charger with the stubs on the Battery Adapter.

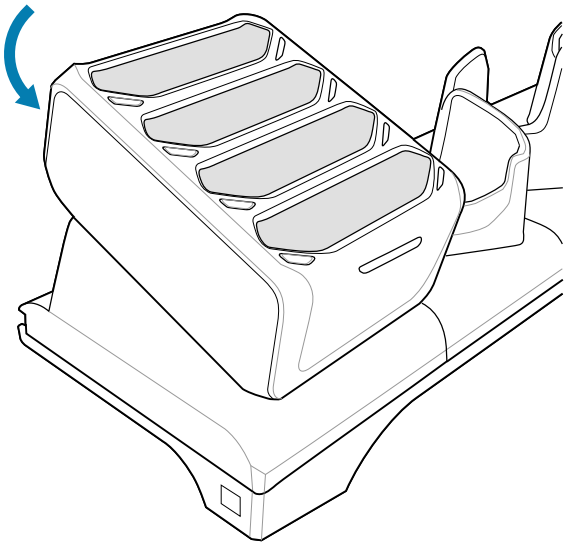

10. Slide the 4-Slot battery charger down toward the front of the cradle.
11. Connect the output power plug to the power port on the 4-Slot Battery Charger.

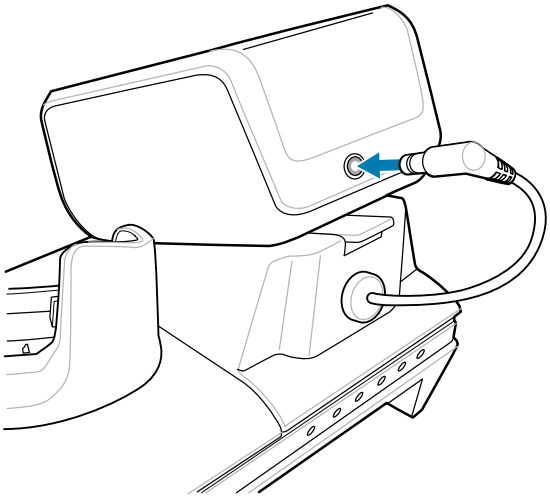

12. Reconnect the power to the cradle.

Removing the 4-Slot Battery Charger

If necessary, remove the 4-Slot Battery Charger from the 5-Slot Charge Only Cradle base.

1. Disconnect the output power plug from the 4-Slot Battery Charger.

2. At the back of the cup, press down on the release latch.

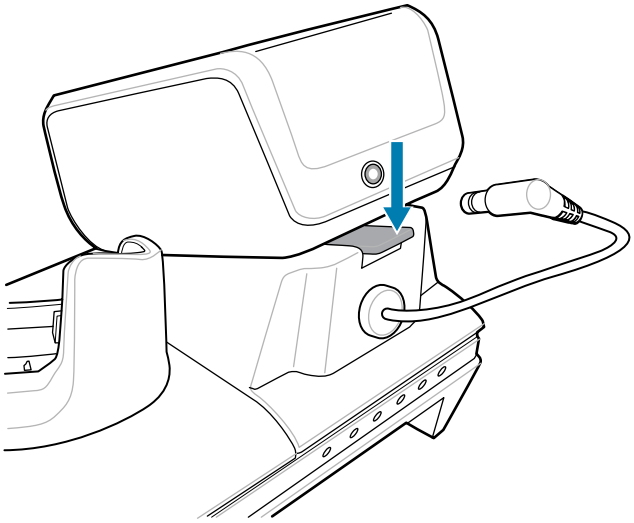

3. Slide the 4-Slot Battery Charger toward the front of the cradle.
4. Lift the 4-Slot Battery Charger off the cradle cup.

Ethernet Communication

The 5-Slot Ethernet Cradle provides Ethernet communication with a network.

LED Indicators

Two green LED lights on the side of the cradle blink to indicate the data transfer rate.

Table 27 LED Data Rate Indicators

Data Rate	1000 LED	100/10 LED
1 Gbps	On/Blink	Off
100 Mbps	Off	On/Blink
10 Mbps	Off	On/Blink

Establishing Ethernet Connection

1. Go to **Settings**.
2. Touch **Network & internet** > **Ethernet**.
3. Slide the Ethernet switch to the **ON** position.
4. Insert the device into a slot.

   The icon appears in the Status bar.
5. Touch **Eth0** to view Ethernet connection details.

Configuring Ethernet Proxy Setting

This device includes Ethernet cradle drivers. After inserting the device, configure the Ethernet connection.

1. Go to **Settings**.
2. Touch **Network & internet** > **Ethernet**.
3. Slide the switch to the **ON** position.
4. Place the device into the Ethernet cradle slot.
5. Touch and hold **eth0** until the menu displays.
6. Touch **Modify Proxy**.
7. Touch the **Proxy** list and select **Manual**.
8. In the **Proxy hostname** field, enter the proxy server address.
9. In the **Proxy port** field, enter the proxy server port number.
10. In the **Bypass proxy for** field, enter addresses for websites that do not require to go through the proxy server.

NOTE: Do not use spaces or carriage returns between addresses when entering proxy addresses in the **Bypass proxy for** field.

11. Use the separator “|” between addresses.
12. Touch **MODIFY**.
13. Touch the Home button.

Configuring Ethernet Static IP Address

This device includes Ethernet cradle drivers. After inserting the device, configure the Ethernet connection.

1. Go to **Settings**.
2. Touch **Network & internet** > **Ethernet**.
3. Slide the switch to the **ON** position.
4. Place the device into the Ethernet cradle slot.
5. Touch **eth0**.
6. Touch **Disconnect**.
7. Touch **eth0**.
8. Touch the **IP** settings list and select **Static**.
9. In the **IP address** field, enter the proxy server address.
10. If required, in the **Gateway** field, enter a gateway address for the device.
11. If required, in the **Netmask** field, enter the network mask address.
12. If required, in the **DNS** address fields, enter a Domain Name System (DNS) addresses.
13. Touch **CONNECT**.
14. Touch the Home button.

4-Slot Device Charge Only Cradle and Spare Battery Charger

The 4-Slot Device Charge Only Cradle and Spare Battery Charger charges up to four devices and four spare batteries.

CAUTION: Ensure that you follow the guidelines for battery safety described in Battery Safety Guidelines.

The 4-Slot Device Charge Only Cradle and Spare Battery Charger:

- Provides 5.0 VDC power for operating the device.
- Simultaneously charges up to four devices and four spare batteries.

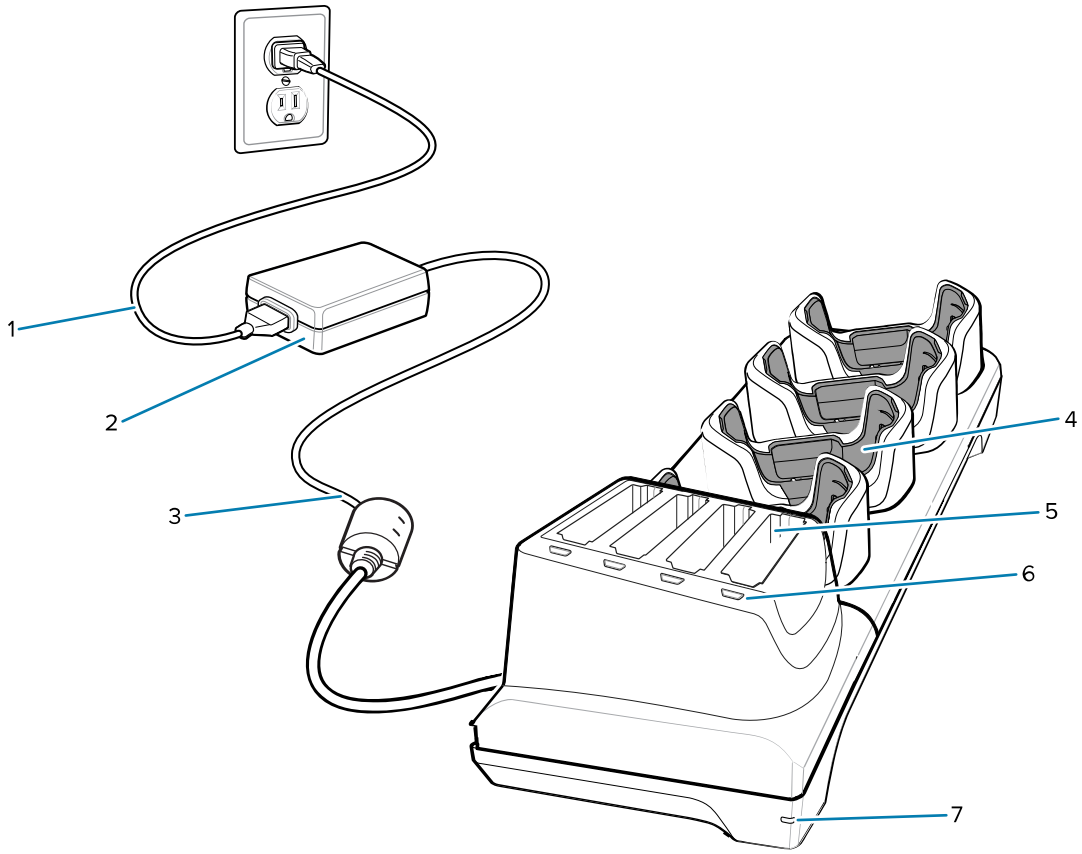

1	AC line cord
2	Power supply
3	DC line cord
4	Device charging slot with shim
5	Spare battery charging slot
6	Spare battery charging LED
7	Power LED

5-Slot (4 Device/4 Spare Battery) Charge Only Cradle with Battery Charger Setup

This section goes over setting up the 5-Slot Charge Only Cradle.

Figure 29 Connect Battery Charger Output Power Plug

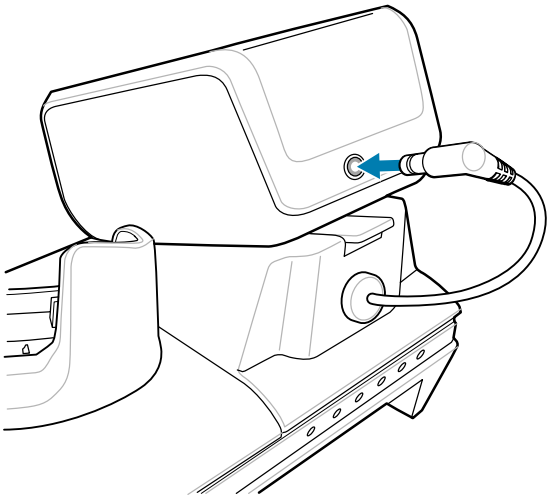

Figure 30 Connect Charge Only Cradle Power

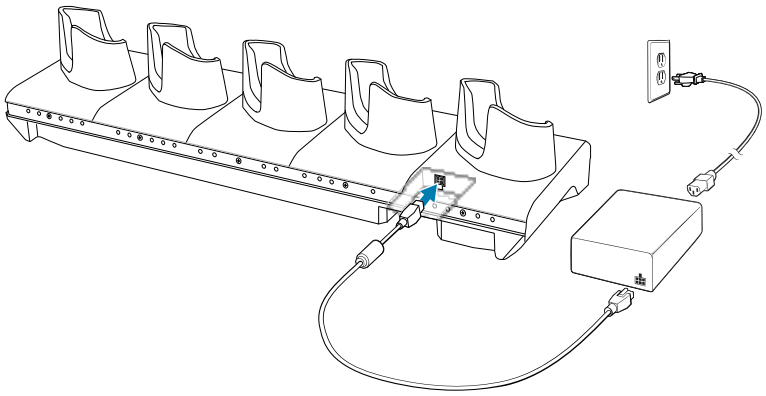

4-Slot Battery Charger

The 4-Slot Battery Charger allows up to four batteries to be charged simultaneously.

CAUTION: Ensure that you follow the guidelines for battery safety described in Battery Safety Guidelines.

Figure 31 4-Slot Battery Charger

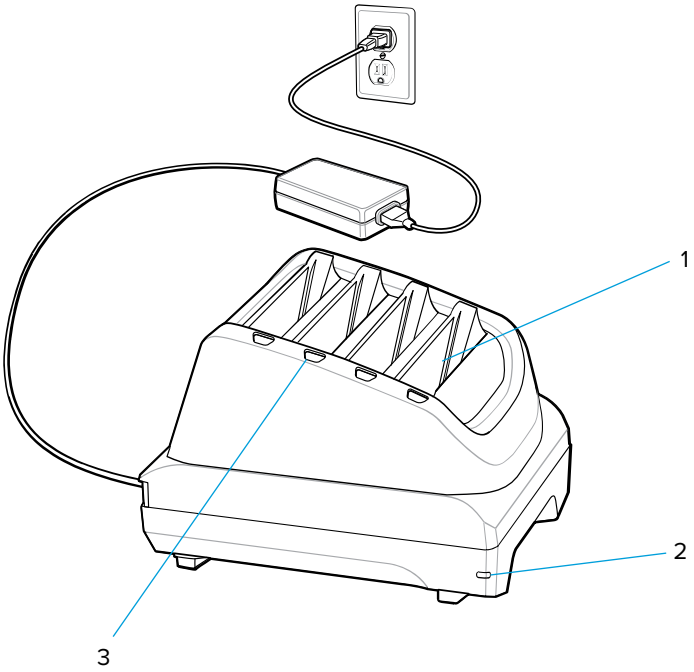

1	Battery slot
2	Power LED
3	Battery charge LED

Single Charger Setup

1. Plug the power supply plug into the power port on the back of the charger.
2. Plug the AC line cord into the power supply.

3. Plug the AC line cord into an AC outlet.

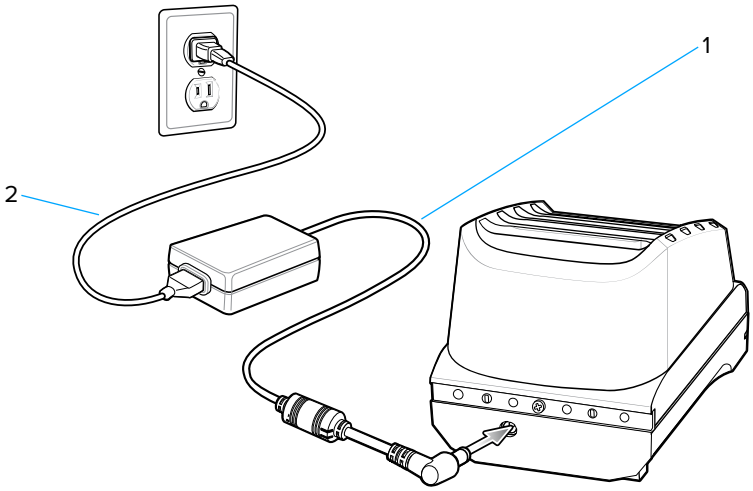

1	Power supply
2	AC line cord

Two Charger Setup

1. Plug the 2-way DC Cable plugs into the power port on the back of each charger.
2. Plug the 2-way DC Cable connector into the power output of the power supply (PWR-BGA12V108W0WW).
3. Plug the AC line cord into the power supply.

4. Plug the AC line cord into an AC outlet.

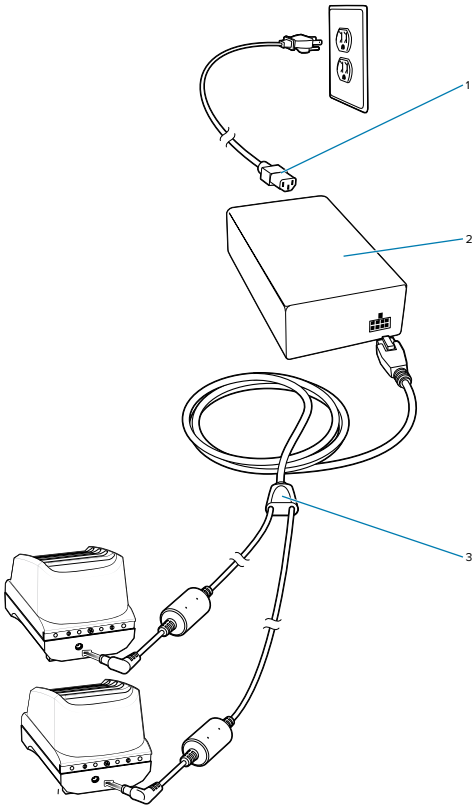

1	AC line cord
2	Power supply
3	2-way DC cable

Charging Spare Batteries

1. Connect the charger to a power source.

2. Insert the battery into a battery charging well and gently press down on the battery to ensure proper contact.

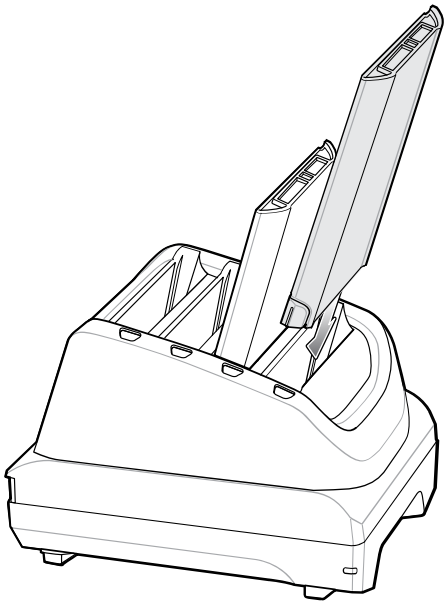

Each Battery Charging LED indicates the status of the battery charging in each slot. See Spare Battery Charging for spare battery charging indicator descriptions.

Connect Cradle

The Connect Cradle transforms the device into a mobile workstation by providing connections to USB 2.0 Type A, RJ45, HDMI, and 12VDC power, and powered USB 24VDC.

CAUTION: Ensure that you follow the guidelines for battery safety described in Battery Safety Guidelines.

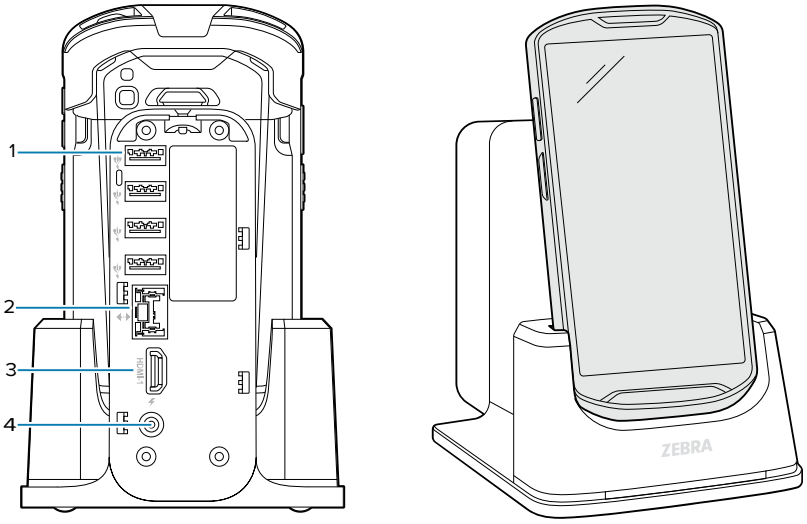

1	USB 2.0 Type A 5V (4)
2	RJ45

3	HDMI
4	12V Power DC

Inserting a Device into the Connect Cradle

To use the Connect Cradle, you must insert a device into it.

Insert the device, bottom-first, into the Connect Cradle.

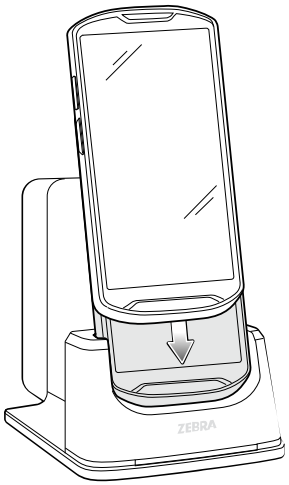

Charge/USB-C Cable

The USB-C Cable snaps onto the bottom of the device and removes easily when not in use.

NOTE: When attached to the device, it provides charging and allows the device to transfer data to a host computer.

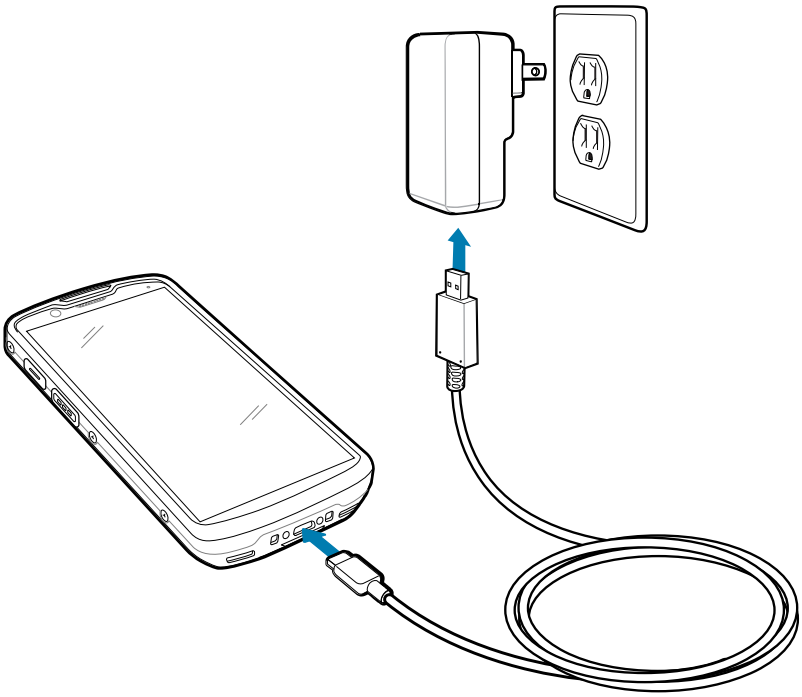

Power Supply with Plug Adapters

Use the power supply with the Rugged Charge/USB Cable to charge the device. The power supply comes in various configurations with different plug adapters for use internationally.

To change the plug adapters:

1. Pull the release button down.

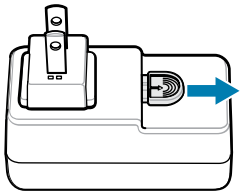

2. Rotate the plug adapter up and out of the power supply.

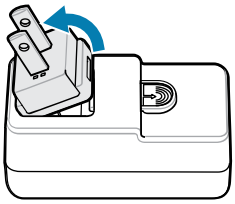

3. Insert the replacement plug adapter into the power supply.

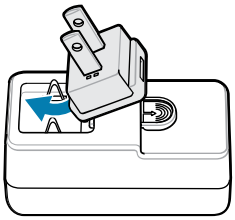

4. Rotate the plug adapter down, and snap it into place.

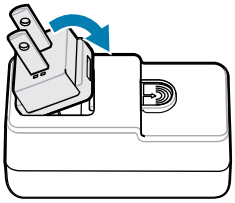

Rugged Boot

The Rugged Boot provides additional protection for the device.

Rugged Boot Installation

To insert the rugged boot:

1. Place the boot on a flat surface, face down.
2. With the device also face down, slide the top into the boot.

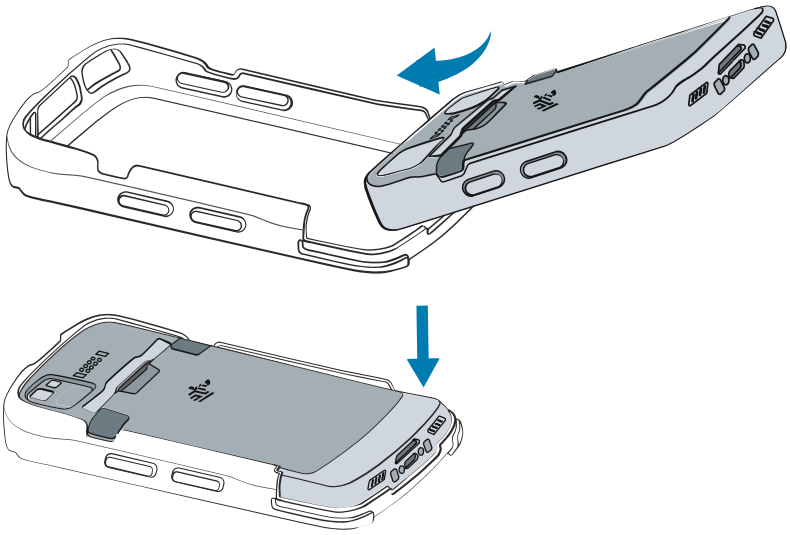

3. Insert the bottom of the boot.

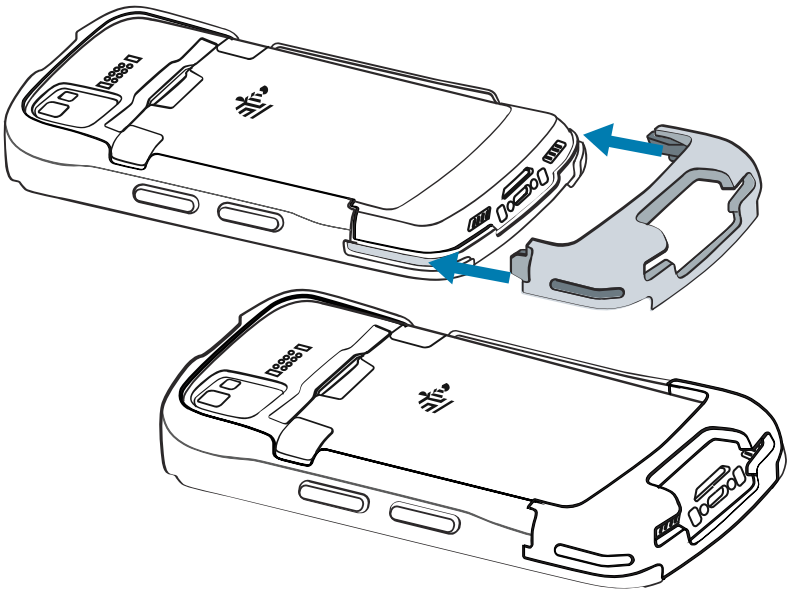

Rugged Boot Removal

To remove the device from the rugged boot:

1. Place thumbs in the center of the boot side panels and pull up both sides of the boot.

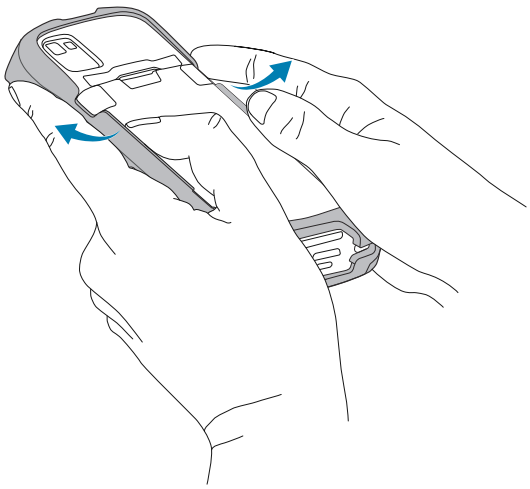

NOTE: Ensure the side panels are pulled up when removing the device from the boot. Do not use the four indentations at the top and bottom of the side panels to remove the device from the boot.

2. Remove the bottom of the boot.

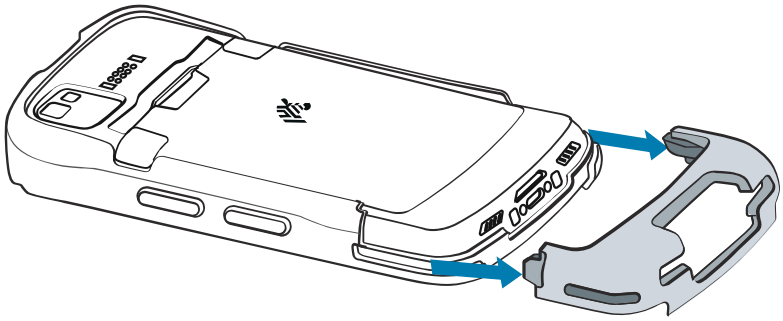

3. Lift the device from the boot.

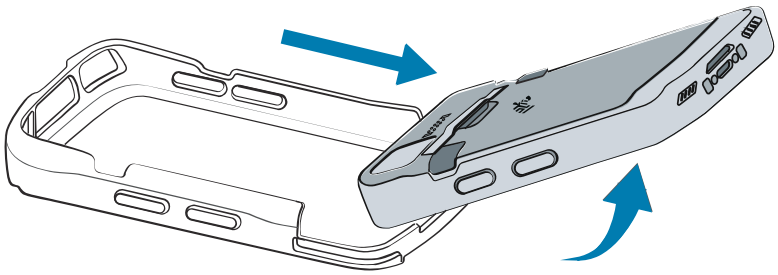

Stylus and Tether

The optional Stylus pen lets you write, draw, or take notes on the device. Learn how to install the stylus/tether on the device.

Stylus and Tether Installation

To install the optional stylus with tether:

1. Insert one of the loop ends of the tether through the hole in the stylus.

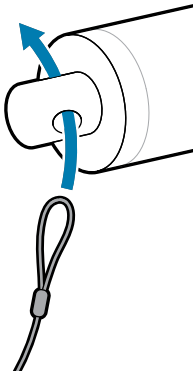

2. Feed the tether through the loop.

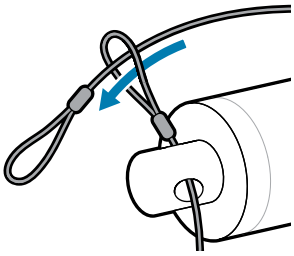

3. Pull the tether until the loop tightens.
4. Insert the tether loop under the device hand strap bar.

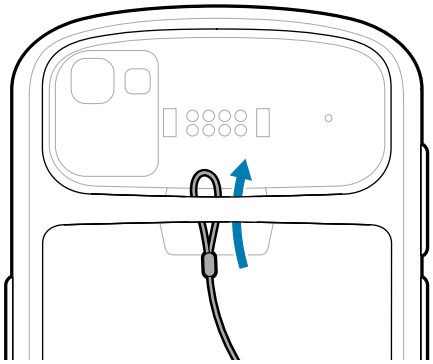

5. Feed the stylus through the loop.

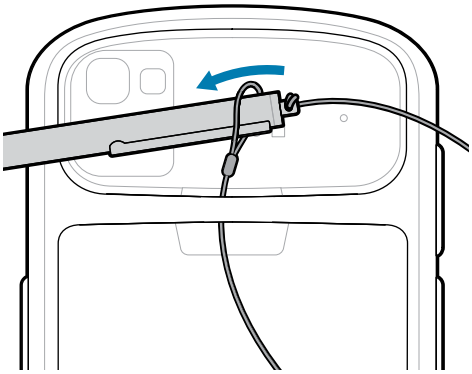

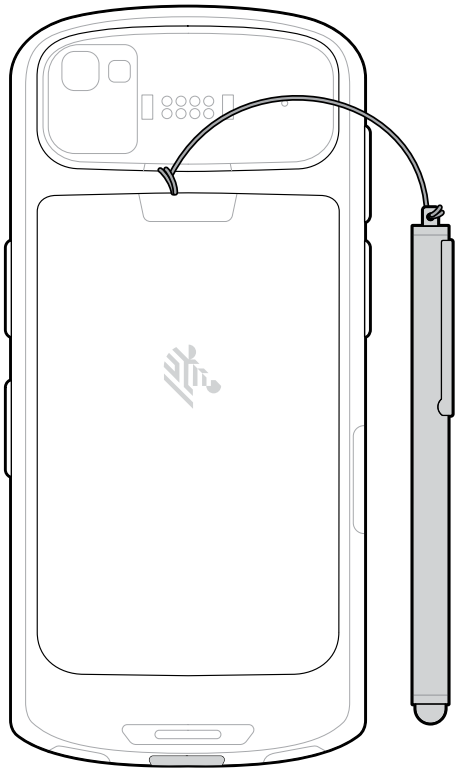

Stylus and Tether with Hand Strap Installation

To install the optional stylus on the hand strap:

1. Insert one of the loop ends of the tether through the hole in the stylus.

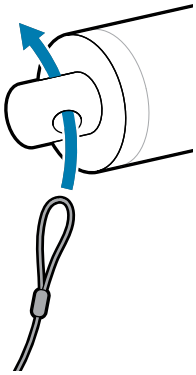

2. Feed the tether through the loop.

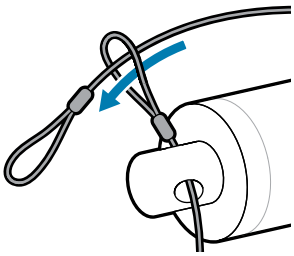

3. Pull the tether until the loop tightens.
4. Insert the loop into the top-hand strap clip.

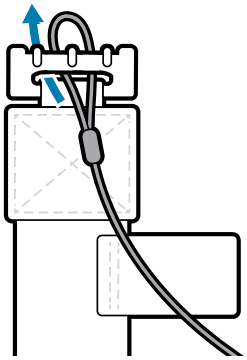

5. Feed the stylus attached to the tether through the tether loop and tighten.

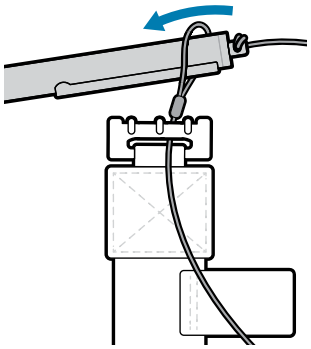

6. Attach the hand strap to the device. Go to Basic Hand Strap.
7. Insert the stylus into the stylus holder on the hand strap when not in use.

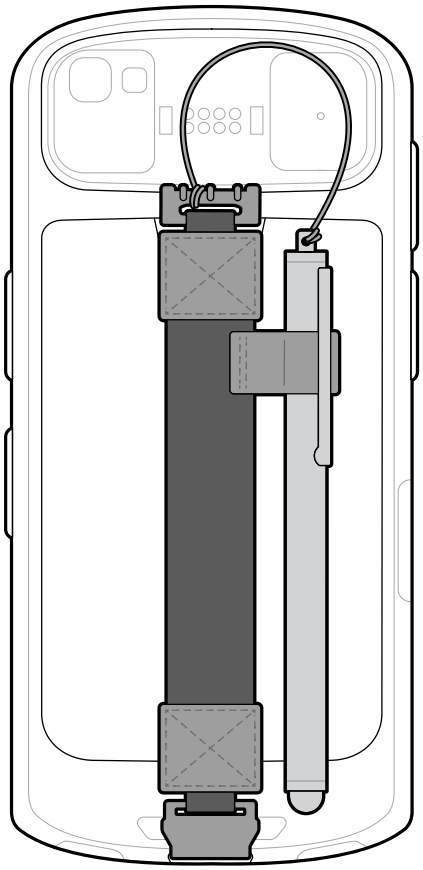

Basic Hand Strap

The Basic Hand Strap provides support when holding the device.

Hand Strap Installation

This section describes the installation of the Basic Hand Strap.

NOTE: The optional stylus must be installed on the hand strap before the hand strap is installed on the device. Go to Stylus and Tether with Handstrap Installation.

To install the hand strap:

1. Clip the top of the hand strap onto the device's top hand strap (towel) bar.

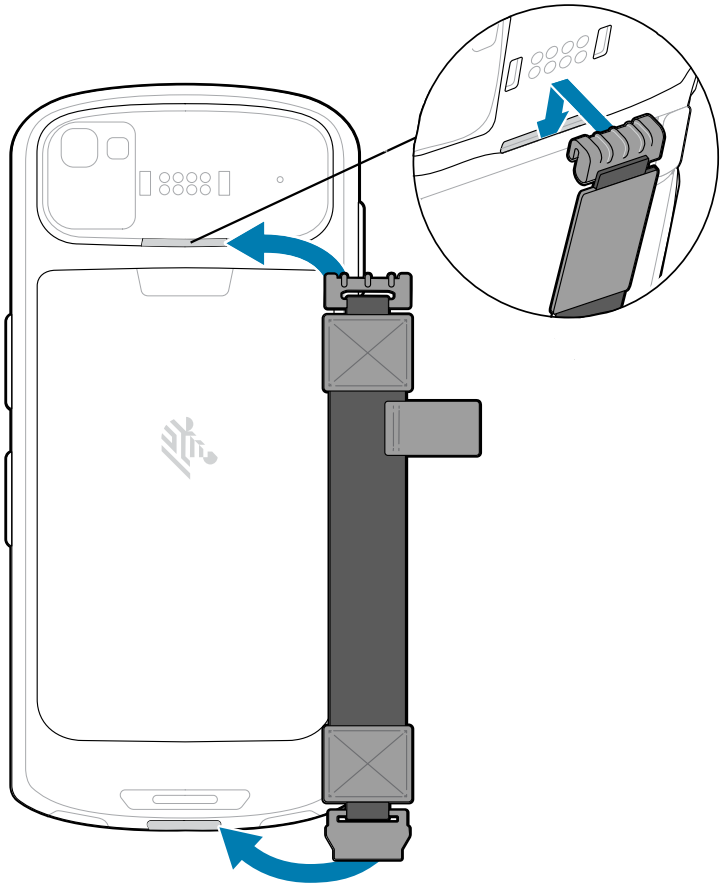

2. Insert the bottom of the hand strap onto the device's bottom bar.

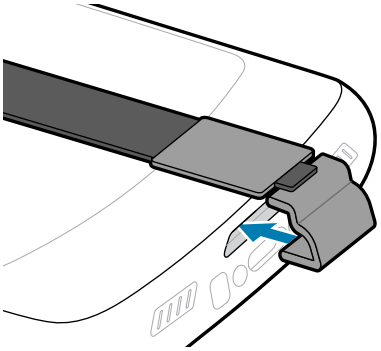

Hand Strap Removal

To remove the hand strap:

1. Place your thumb on the top of the hand strap (below the top clip) and index finger underneath the top of the hand strap and pull the top clip up and off of the hand strap bar.

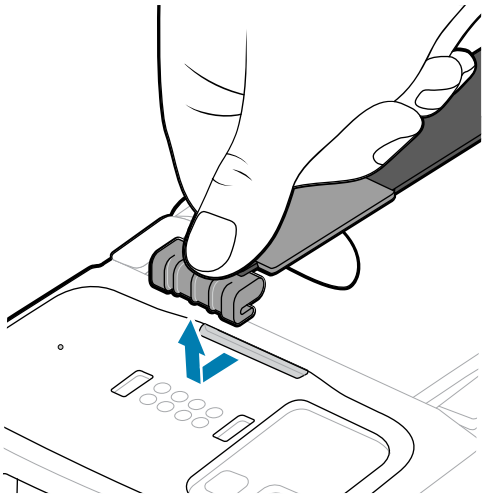

2. Remove the bottom clip by placing both thumbs on the clip and pushing down to unclip.

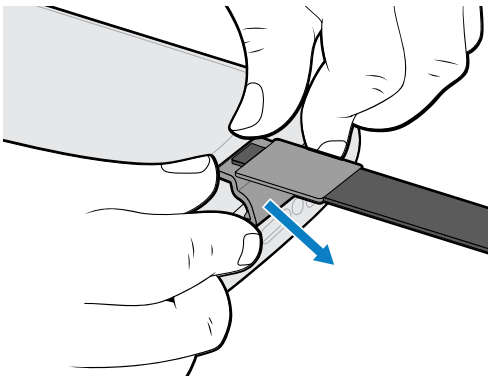

Trigger Handle

The Trigger Handle adds a gun-style handle with a scanning trigger to the device. It increases comfort when using the device in scan-intensive applications for extended periods of time.

NOTE: The Rugged Boot is required to install the Trigger Handle (p/n TRG-NGTC5-ELEC-01) onto the device and must be purchased separately. Go to Rubber Boot Installation.

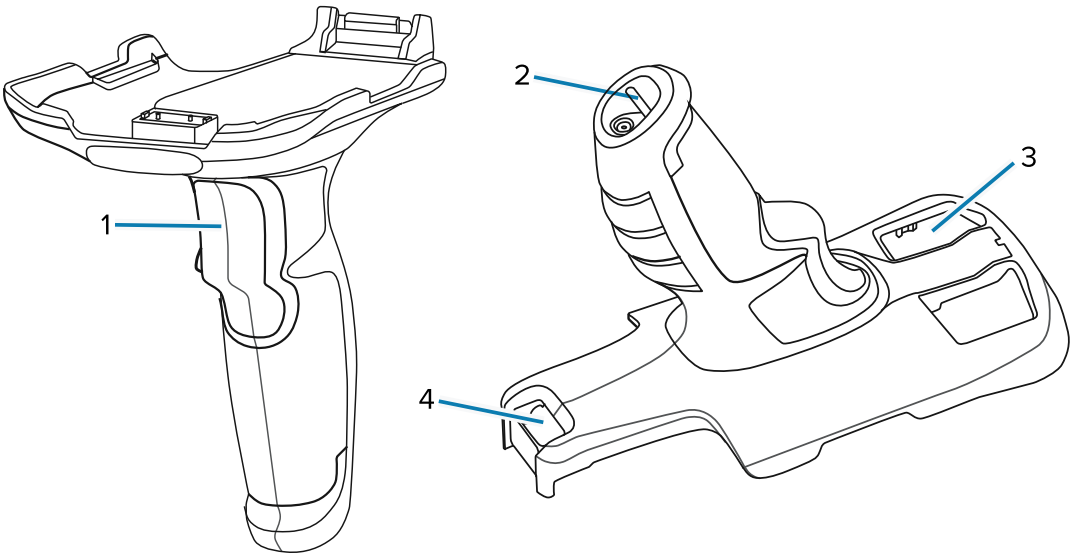

1	Trigger
2	Lanyard mount
3	Camera window
4	Release latch

Inserting the Device into the Trigger Handle

1. Align and insert the device with the rugged boot into the top of the trigger.

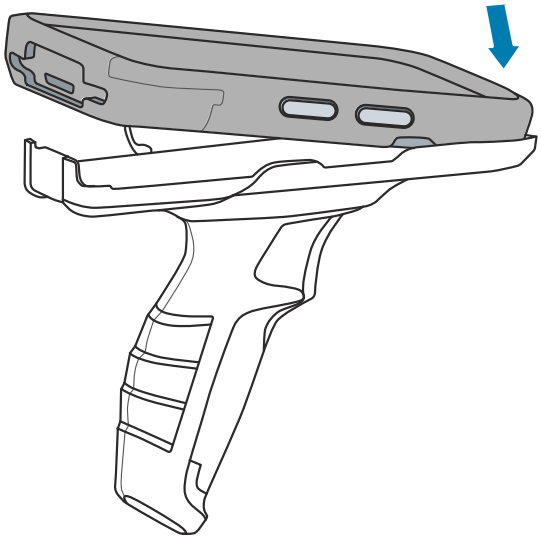

2. Rotate the device down and press down until it snaps into place.

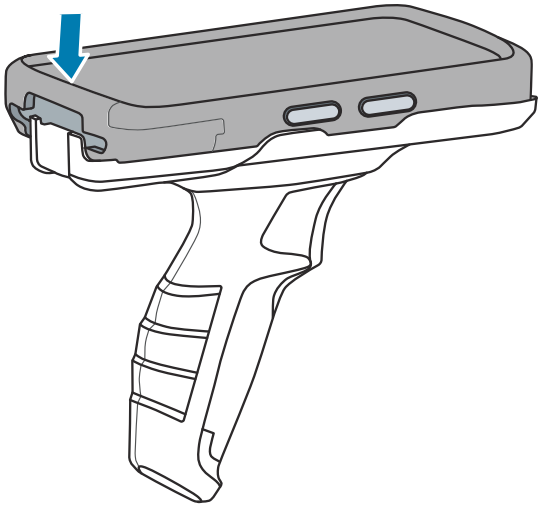

Removing the Device from the Trigger Handle

1. Place one hand around the Trigger Handle while holding the device with the other hand.

2. Push up the trigger handle release latch with your thumb and then rotate the device away from the trigger handle.

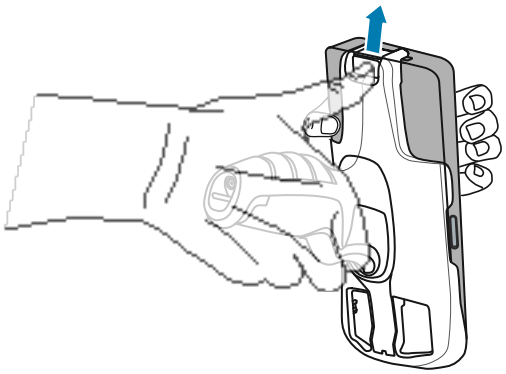

3. Slide the device out of the trigger handle.

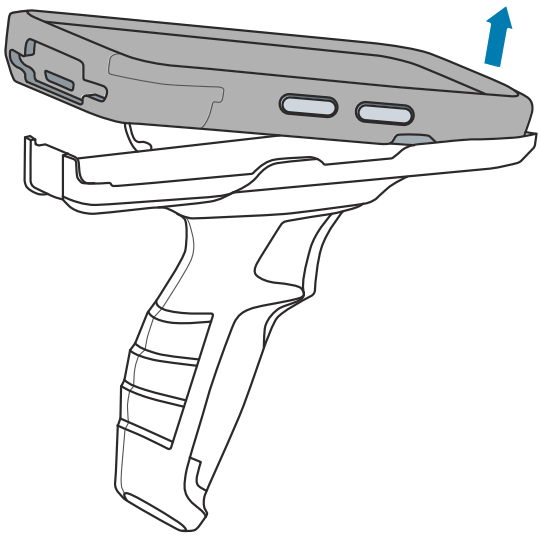

Installing the Optional Lanyard

1. Insert the loop end of the tether into the slot on the bottom of the device handle (1).

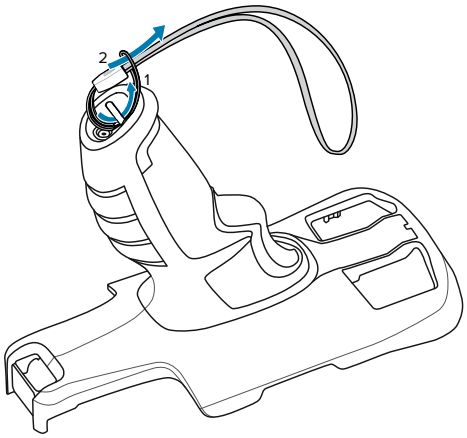

2. Feed the lanyard through the loop (2).
3. Pull the lanyard until the loop tightens.

Wall Installation

Use the Rack/Wall Mount Bracket to mount battery chargers or a cradle to a wall.

IMPORTANT: For proper installation, consult a professional installer. Failure to install the bracket properly could result in damage to the hardware.

When installing the rack/wall mount bracket on a wall:

- First, assemble the bottom tray, install the bottom tray on the wall, and then assemble the top tray.
- Use mounting hardware (screws and/or anchors) appropriate for the type of wall the bracket is mounted on.
  - The Mount Bracket mounting slot dimensions are 5 mm (0.2 in.).
  - Fasteners must hold a minimum of 20 kg (44 lb).
- Install mounting brackets at the following maximum heights from the ground:
  - 5-slot cradle: 1.2 m (4 ft)
  - 4-slot battery charger: 0.91 m (3 ft)

5-Slot Cradle Bracket Installation

Use the Rack/Wall Mount Bracket to mount a 5-slot cradle on a rack. When installing on a rack, assemble the bracket and cradles/chargers and then install the assembly on the rack.

1. Place the power supply in the bottom tray.
2. Connect the AC line cord to the power supply.
3. Connect the DC line cord to the power supply.
4. Secure the power supply and cables to the bottom tray with tie wraps.

NOTE: Ensure that the tie wrap buckle is on the side of the power supply and not on top. The tie wrap buckle on top of the power supply interferes with the top tray.

5. Route cables through the cable slots.

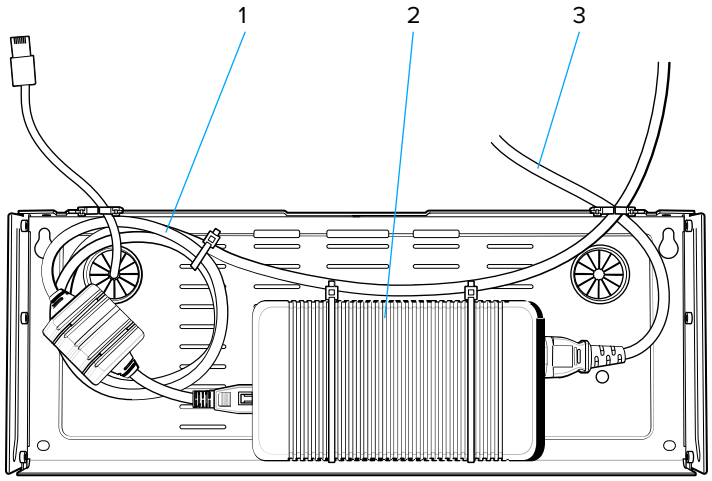

1	DC line cord
2	Power supply
3	AC line cord

6. Secure four M2.5 studs to the top tray as shown.

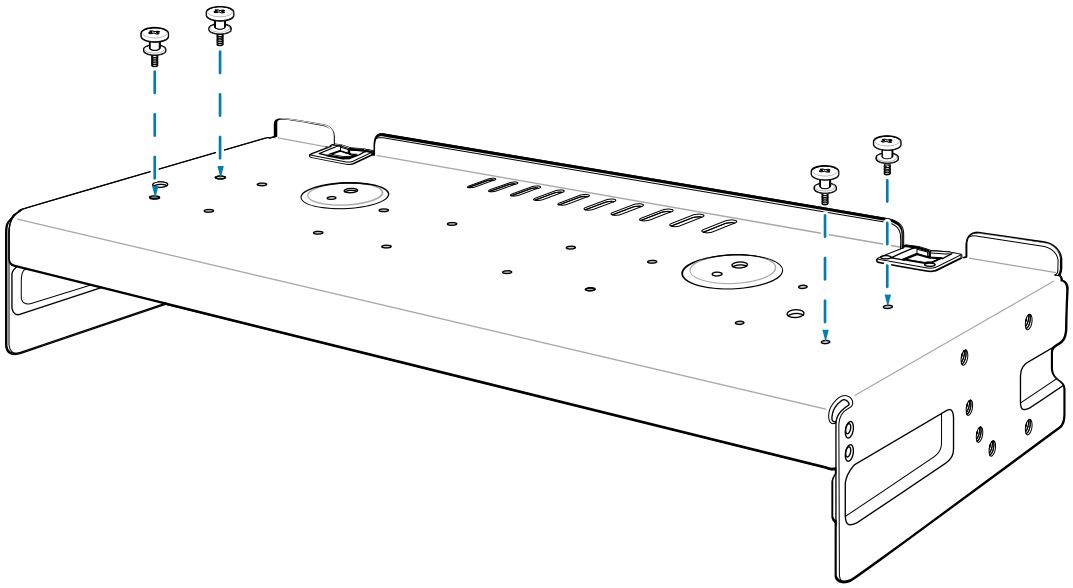

7. Align and install a 5-Slot cradle onto the studs of the top tray.

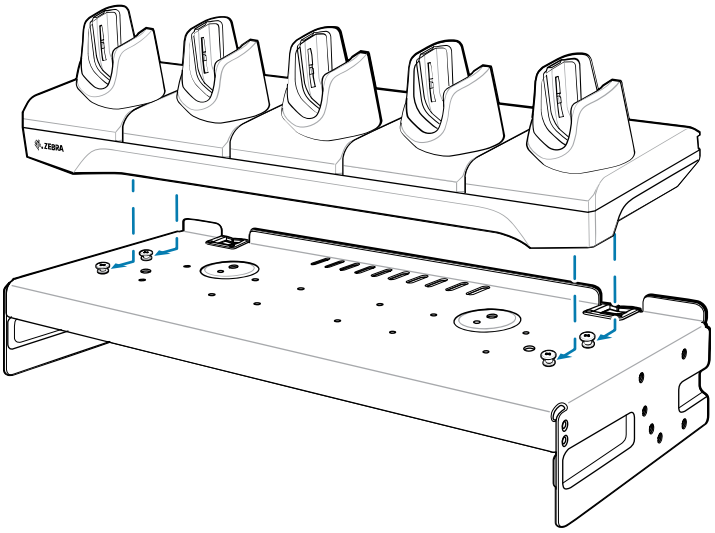

8. Secure cradle to top tray with two M2.5 safety screws.

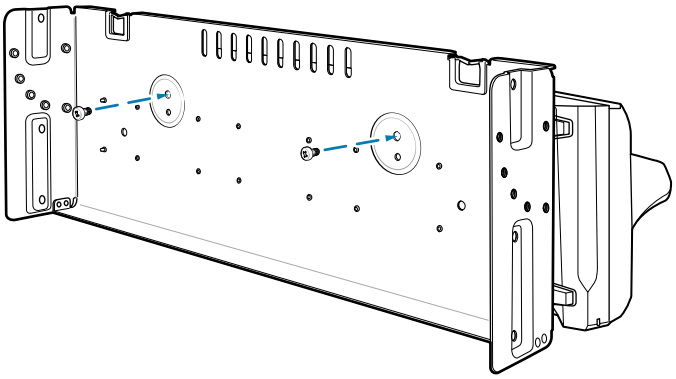

9. Slide the top tray onto the bottom tray.

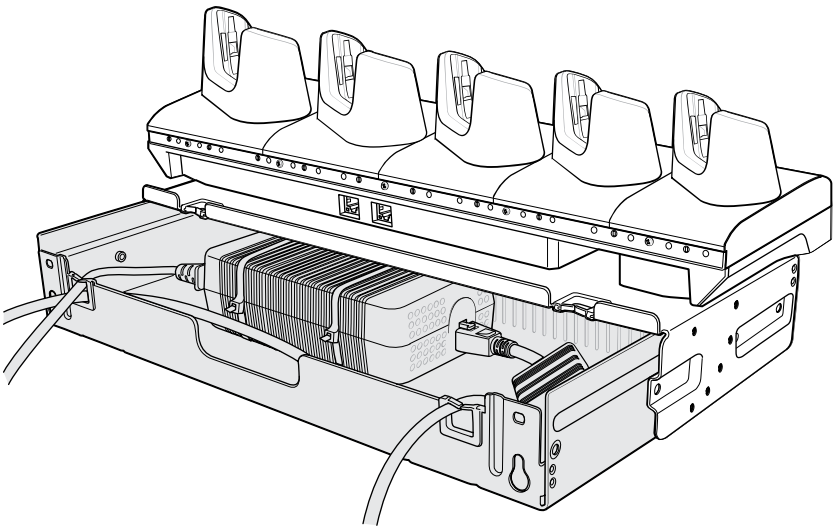

10. Connect cables to cradle.

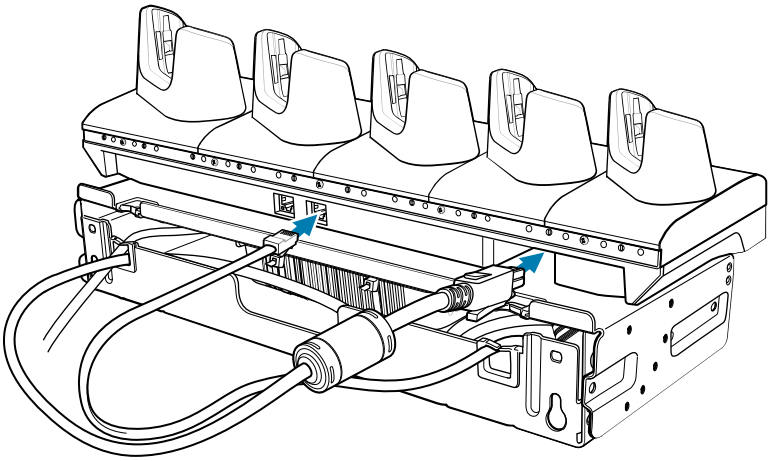

11. Secure the top tray to the bottom tray with 4 M5 screws (two on each side).

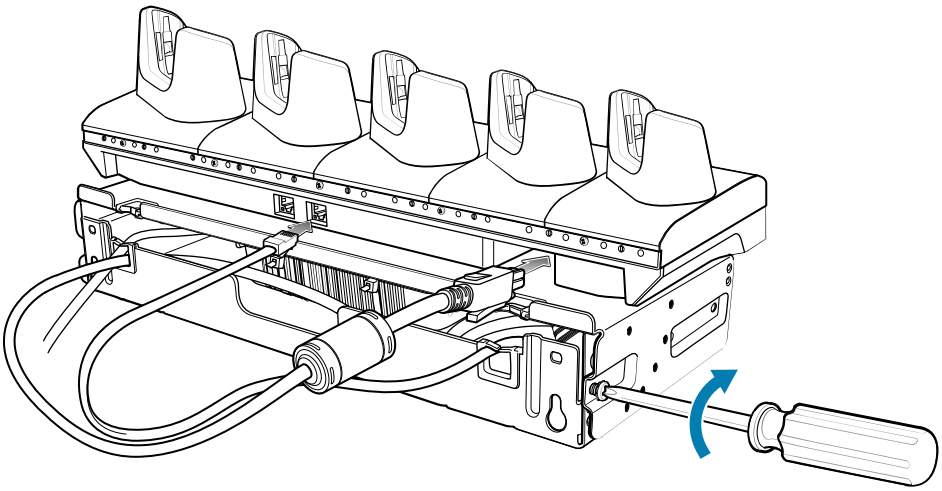

Four 4-Slot Battery Charger Bracket Installation

Use the Rack/Wall Mount Bracket to mount four 4-Slot Battery Chargers on a rack. When installing on a rack, assemble the bracket and chargers and then install the assembly on the rack.

1. Place one power supply horizontally in the bottom tray.
2. Place another power supply vertically in the bottom tray.
3. Connect AC line cords to the power supplies.
4. Connect DC line cords to the power supplies.
5. Secure the power supplies and cables to the bottom tray with tie wraps.

6. Route the cables through the cable slots.

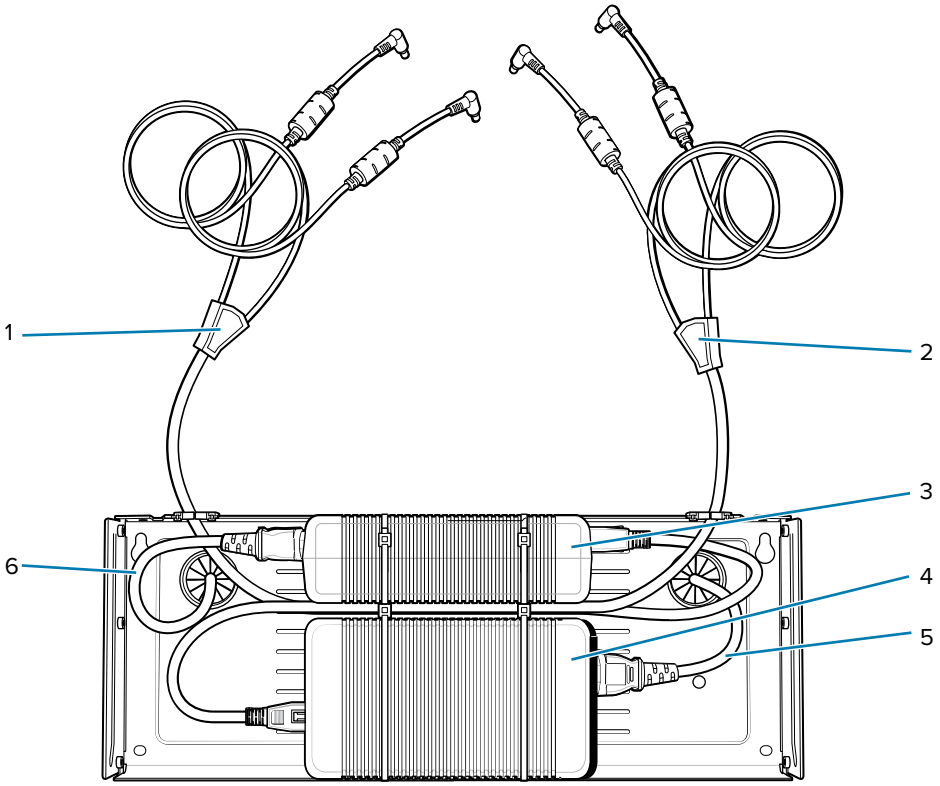

1	DC Y cable 1
2	DC Y cable 2
3	Power supply 1
4	Power supply 2
5	AC line cord 2
6	AC line cord 1

7. Slide the top and bottom tray together until the top tray touches the vertical power supply.

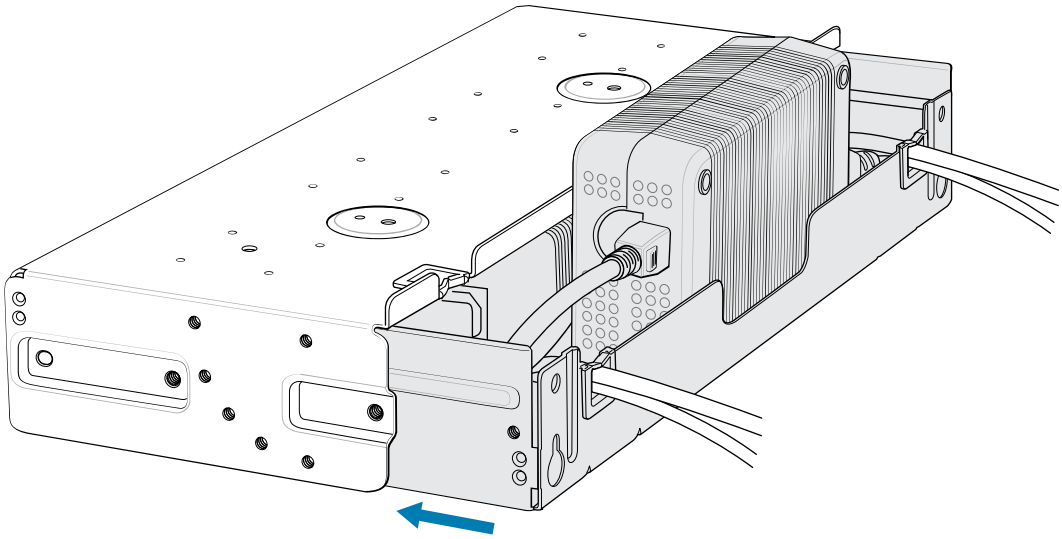

8. Install 16 M2.5 studs onto the top tray as shown.

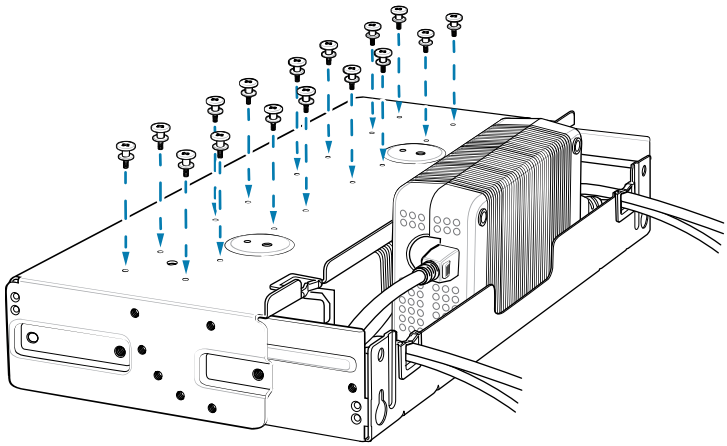

9. Align and install a 4-Slot Battery Charger onto each set of four studs.

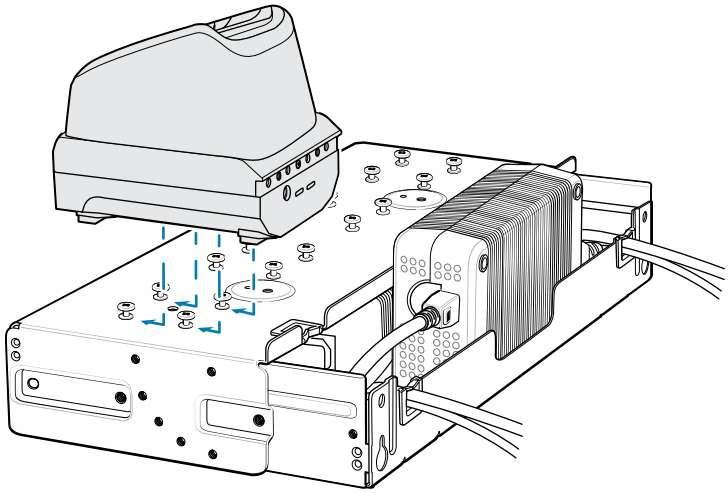

10. Connect DC Y cables to the four 4-Slot Battery Chargers.

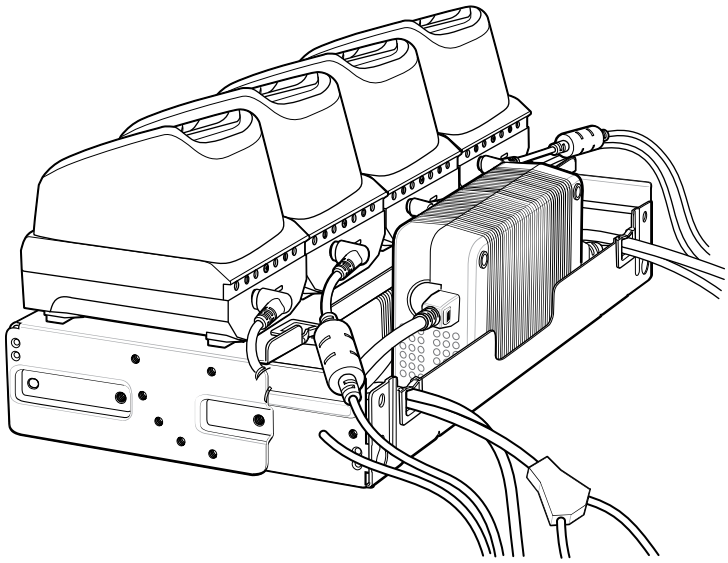

11. Secure the top tray to the bottom tray with four M5 screws (two on each side).

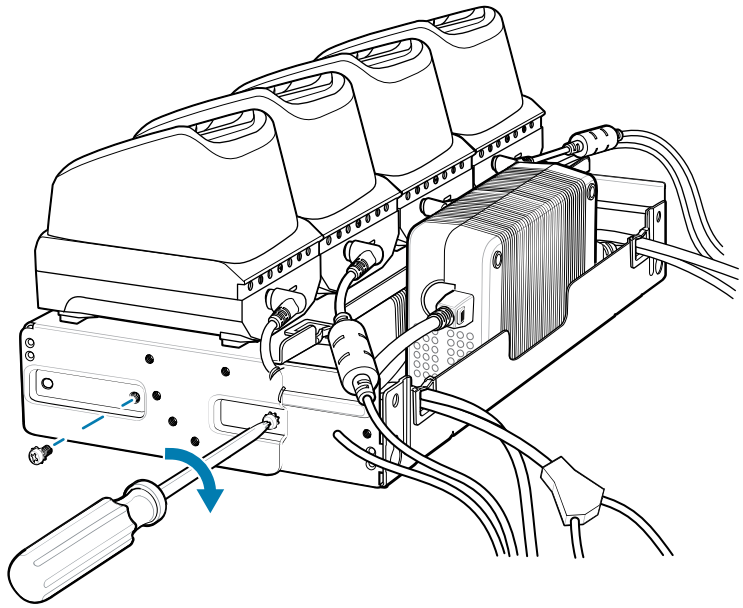

Mounting a Single Bracket to a Wall

IMPORTANT: When installing the bracket, ensure that all building codes are followed when connecting the power supplies to an AC power source.

While installing the brackets, power supplies, and cables:

- Use tie wraps to secure cables to the bracket and rails.
- Coil cables wherever possible.
- Route power cables along the rails.

- Route inter-cradle cables to the side rails and then from the rails to the bracket.

1. Drill holes and install anchors according to the template supplied with the bracket.
2. Install two screws for the bottom of the bracket. The screw heads should protrude 2.5 mm (0.01 in) from the wall.

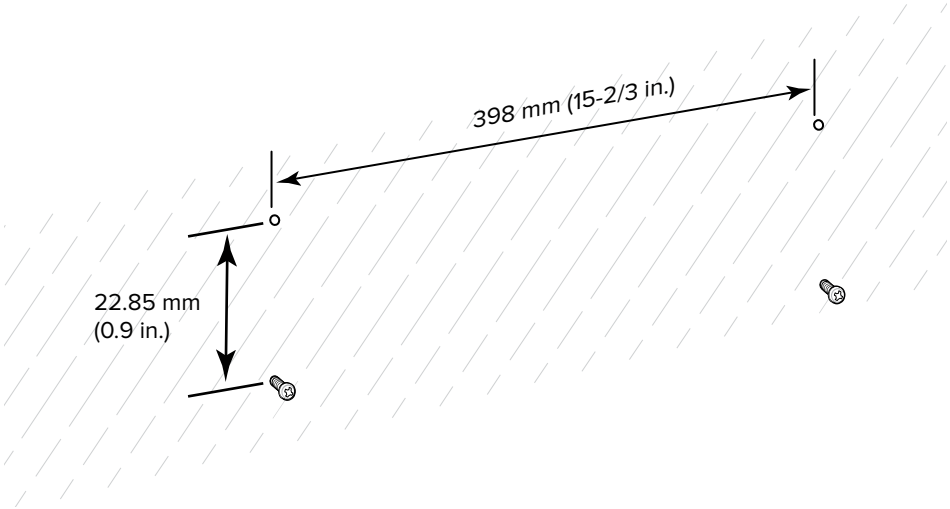

3. Align the mounting bracket's bottom mounting keyholes with the screws.
4. Hang the bracket on the screws.

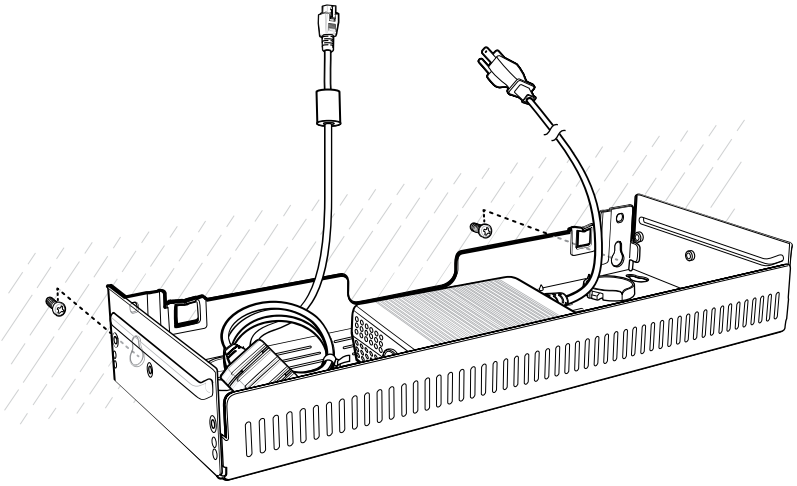

5. Install the two top screws.

6. Tighten all screws.

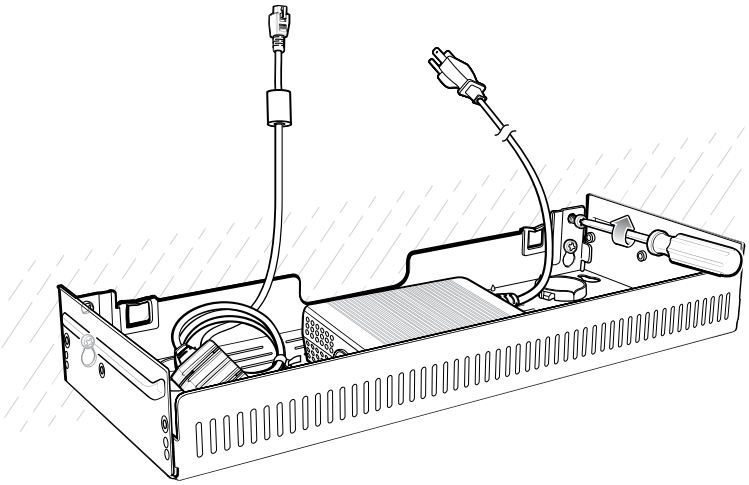

7. Add the four 4-Slot battery chargers or cradle onto the bracket.
8. Route the cables as appropriate and connect to a power source.

Rack Mount Installation

NOTE: Use screws provided with the rack system. Refer to the rack user documentation for instructions.

IMPORTANT: When installing the rack, ensure that all building codes are followed when connecting the power supplies to an AC power source.

While installing the brackets, power supplies, and cables:

- Use tie wraps to secure cables to the bracket and rails.
- Coil cables wherever possible.
- Route power cables along the rails.
- Route inter-cradle cables to the side rails and then from the rails to the bracket.
- Install mounting brackets at the following maximum heights from the ground:
  - 5-slot cradle: 1.2 m (4 ft)
  - 4-slot battery charger: 0.91 m (3 ft)

1. Secure mounting brackets to both sides of the top tray with four M5 screws (two on each side). For 5-Slot cradles, position the flange for horizontal installation. For 4-Slot battery chargers, position the flange for 25° installation.

Figure 32 Flange Horizontal Position (5-Slot Cradles)

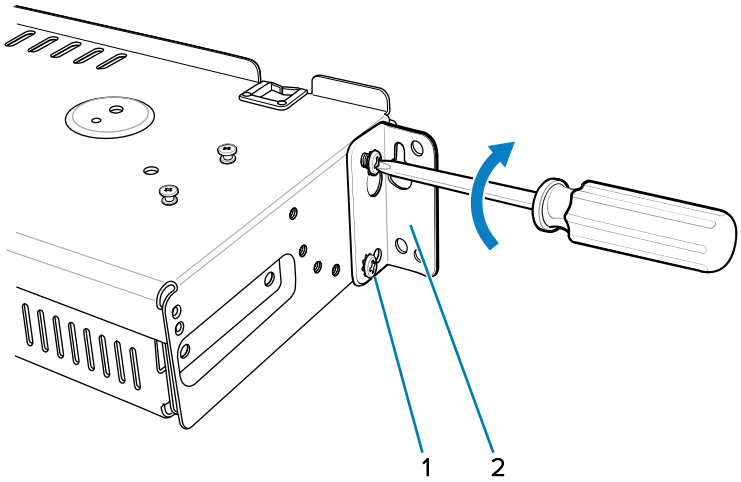

1	Fifth screw hole
2	Flange

Figure 33 Flange 25° Position (4-Slot Battery Chargers)

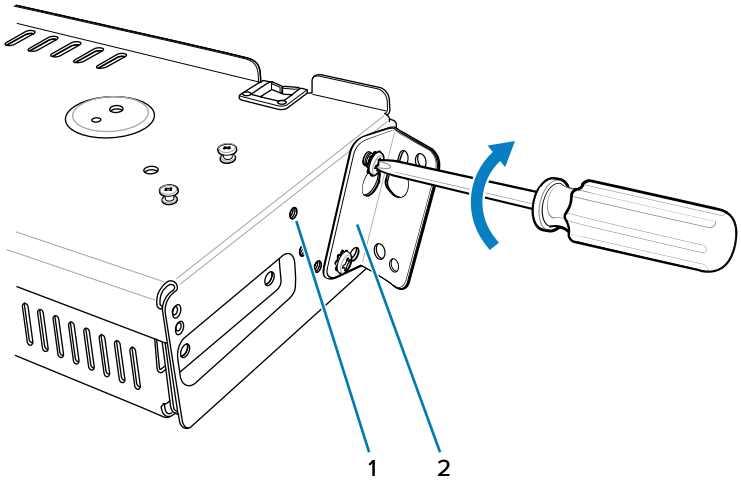

1	Top screw hole
2	Flange

2. Partially install two rack system mounting screws for each mounting bracket to be installed. The screw heads should protrude halfway from the rail.

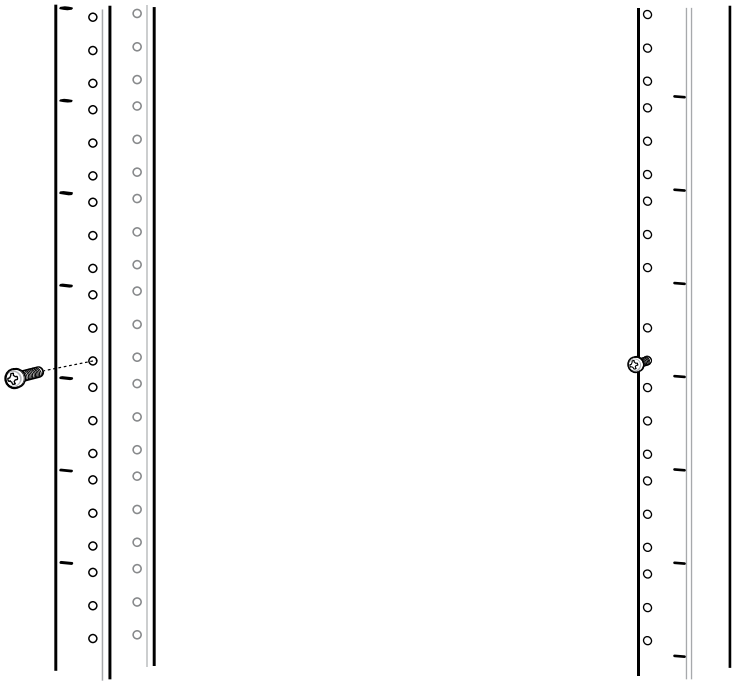

Note the following distances:

- Allow a clearance of at least 7 cm (2.75 in.) between the top of a device and the bottom of the mounting bracket above it.
- Two horizontally mounted brackets should be at least 35.6 cm (14 in.) apart vertically (from the top of one flange to the top of the next flange).
- A horizontally mounted bracket and a 25° mounted bracket should be at least 33.7 cm (16.25 in.) apart vertically (from top of one flange to the top of the next flange).

3. For each mounting bracket, align the bracket's top mounting keyholes with the screws. Place the brackets on the screws.

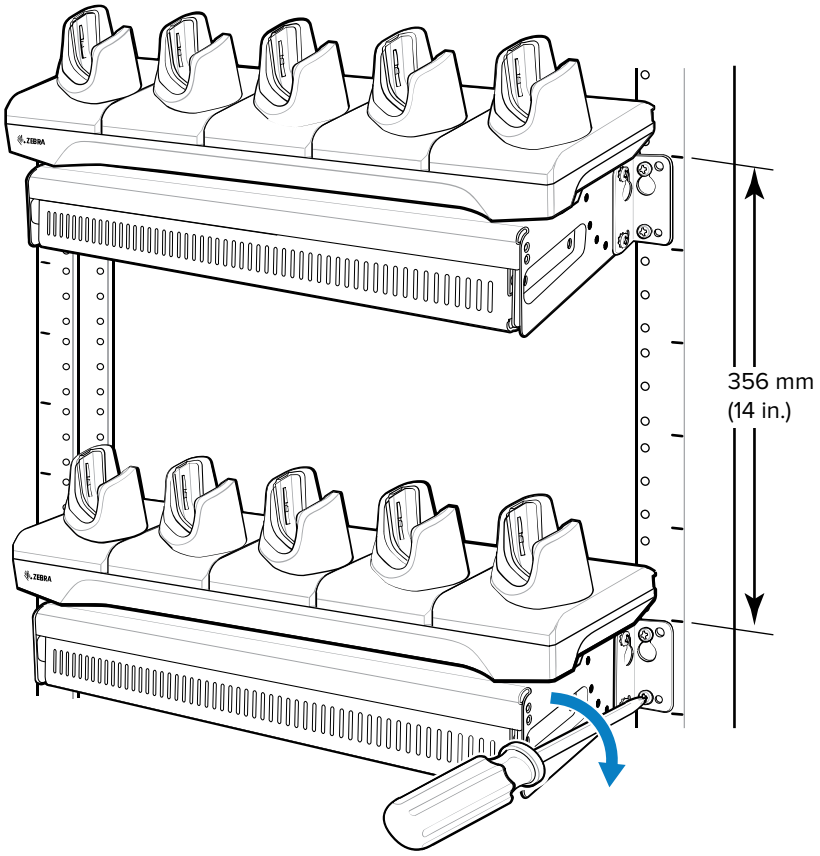

4. Tighten the top screws for each bracket.
5. Install and tighten the bottom screws to fully secure the brackets.
6. Route the cables as appropriate and connect them to a power source.

Application Deployment

This section provides steps on device security, app development, and app management. It also provides instructions for installing apps and updating the device software.

NOTE: Ensure that the date is set correctly before installing certificates or when accessing secure websites.

Secure Certificates

If the VPN or Wi-Fi networks rely on secure certificates, obtain the certificates and store them in the device's secure credential storage before configuring access to the VPN or Wi-Fi networks.

If downloading the certificates from a website, set a password for the credential storage. The device supports X.509 certificates saved in PKCS#12 key store files with a .p12 extension (if key store has a .pfx or other extension, change to .p12).

The device also installs any accompanying private key or certificate authority certificates contained in the key store.

Installing a Secure Certificate

If required by the VPN or Wi-Fi network, install a secure certificate on the device.

1. Copy the certificate from the host computer to the root of the microSD card or the device's internal memory.
2. Go to **Settings**.
3. Touch **Security** > **More security settings** > **Encryption & credentials**.
4. Touch **Install a certificate** and select the type of certificate.
5. Navigate to the location of the certificate file.
6. Touch the filename of the certificate to install.
7. If prompted, enter the certificate's password and touch **OK**.
8. Enter a name for the certificate and in the Credential use drop-down, select **VPN and apps** or **Wi-Fi**.
9. Touch **OK**.

The certificate can now be used when connecting to a secure network. For security, the certificate is deleted from the microSD card or internal memory.

Configuring Credential Storage Settings

Configure credential storage from the device settings.

1. Go to **Settings**.
2. Touch **Security** > **More security settings** > **Encryption & credentials**.
3. Select an option.
   - Touch **Trusted credentials** to display the trusted system and user credentials.
   - Touch **User credentials** to display user credentials.
   - Touch **Install a certificate** to install a secure certificate from the microSD card or internal storage. Go to Installing a Secure Certificate.
   - Touch **Clear credentials** to delete all secure certificates and related credentials.

Android Development Tools

Development tools for Android include Android Studio, EMDK for Android, and StageNow.

Android Development Workstation

Android development tools are available at developer.android.com.

To start developing applications for the device, download Android Studio. Development can take place on a Microsoft® Windows®, Mac® OS X®, or Linux® operating system.

Applications are written in Java or Kotlin, but compiled and executed in the Dalvik virtual machine. Once the Java code is compiled cleanly, the developer tools make sure the application is packaged properly, including the AndroidManifest.xml file.

Android Studio contains a full featured IDE as well as SDK components required to develop Android applications.

Enabling Developer Options

Developer options set development-related settings. By default, these options are hidden.

1. Go to **Settings**.
2. Touch **About phone**.
3. Scroll down to **Build number**.
4. Tap **Build number** seven times (or as prompted by the device).

   You are now a developer! displays.
5. Touch **Back**.
6. Touch **System** > **Developer options**.

   The Developer options are now displayed.

EMDK for Android

EMDK for Android provides developers with tools to create business applications for enterprise mobile devices. It is designed for use with Google's Android Studio and includes Android class libraries such as Barcode, sample applications with source code, and the associated documentation.

EMDK for Android allows applications to take full advantage of the capabilities that Zebra devices have to offer. It embeds Profile Manager technology within Android Studio IDE, providing a GUI-based development tool designed specifically for Zebra devices. This allows fewer lines of code, resulting in reduced development time, effort, and errors.

For more information, go to techdocs.zebra.com/emdk-for-android/about/.

StageNow for Android

StageNow is Zebra's next-generation Android Staging Solution built on the MX platform. It allows quick and easy creation of device profiles and can deploy to devices simply by scanning a barcode or reading a tag.

The StageNow Staging Solution includes the following components:

- The StageNow Workstation tool installs on the staging workstation (host computer) and lets the administrator easily create staging profiles for configuring device components, and perform other staging actions such as checking the condition of a target device to determine suitability for software upgrades or other activities. The StageNow Workstation stores profiles and other created content for later use.
- The StageNow Client resides on the device and provides a user interface for the staging operator to initiate staging. The operator uses one or more of the desired staging methods (print and scan a barcode or read an NFC tag) to deliver staging material to the device.

For more information, go to techdocs.zebra.com/stagenow/.

GMS Restricted

GMS Restricted mode deactivates Google Mobile Services (GMS). All GMS apps are disabled on the device and communication with Google (analytics data collection and location services) is disabled.

Use StageNow to disable or enable GMS Restricted mode. After a device is in GMS Restricted mode, enable and disable individual GMS apps and services using StageNow. To ensure GMS Restricted mode persists after an Enterprise Reset, use the Persist Manager option in StageNow.

For more information, go to techdocs.zebra.com/gmsmgr/.

ADB USB Setup

To use the Android Debug Bridge (ADB), install the development SDK on the host computer then install the ADB and USB drivers.

Before installing the USB driver, make sure that the development SDK is installed on the host computer. Go to developer.android.com/sdk/index.html for details on setting up the development SDK.

The ADB and USB drivers for Windows and Linux are available on the Zebra Support Central web site at zebra.com/support. Download the ADB and USB Driver Setup package. Follow the instructions with the package to install the ADB and USB drivers for Windows and Linux.

Enabling USB Debugging

By default, USB debugging is disabled.

Ensure that you have Developer Options enabled. Go to Developer Options for more information.

1. Touch **System** > **Developer options**.
2. Slide the **USB debugging** switch to the **On** position.

   The **Allow USB debugging?** message displays on the device.
3. Touch **OK**.
4. Connect the device to the host computer using the rugged charge/USB cable.

   The **USB debugging connected** message displays on the device.

   If the device and host computer are connected for the first time, the **Allow USB debugging?** dialog box with the **Always allow from this computer** check box displays. Select the check box, if required.
5. Touch **OK** or **Allow**.
6. On the host computer, navigate to the **platform-tools** folder and open a command prompt window.
7. Type `adb devices`.

   The following displays:

```
List of devices attached          XXXXXXXXXXXXXXX device
```

   Where XXXXXXXXXXXXXXX is the device number.

NOTE: If device number does not appear, ensure that ADB drivers are installed properly.

8. Touch **Home**.

Entering Android Recovery Manually

Many of the update methods discussed in this section require putting the device into Android Recovery mode. If you are unable to enter Android Recovery mode through `adb` commands, use the following steps to manually enter Android Recovery mode.

1. Press and hold the Power button until the menu appears.
2. Touch **Restart**.
3. Press and hold the PTT button until the device vibrates.

   The System Recovery screen appears.

Application Installation Methods

After an application is developed, install the application onto the device using one of the supported methods.

- USB connection
- Android Debug Bridge
- Wireless Debug Bridge

- microSD Card
- Mobile device management (MDM) platforms that have application provisioning. Refer to the MDM software documentation for details.

Installing Applications Using the USB Connection

Use the USB connection to install applications onto the device.

CAUTION—PRODUCT DAMAGE: When connecting the device to a host computer and mounting the microSD card, follow the host computer's instructions for connecting and disconnecting USB devices, to avoid damaging or corrupting files.

1. Connect the device to a host computer using the Rugged Charge/USB cable.
2. On the device, pull down the Notification panel and touch **Charging this device via USB**.

   By default, **No data transfer** is selected.
3. Touch **File Transfer**.
4. On the host computer, open a file explorer application.
5. On the host computer, copy the application APK file from the host computer to the device.

CAUTION—PRODUCT DAMAGE: Carefully follow the host computer's instructions to unmount the microSD card and disconnect USB devices correctly to avoid losing information.

6. Disconnect the device from the host computer.
7. Swipe the screen up and select to view files on the Internal Storage.
8. Locate the application APK file.
9. Touch the application file.
10. Touch **Continue** to install the app or **Cancel** to stop the installation.
11. To confirm installation and accept what the application affects, touch **Install**. Otherwise, touch **Cancel**.
12. Touch **Open** to open the application or **Done** to exit the installation process.

    The application appears in the App list.

Installing Applications Using the Android Debug Bridge

Use ADB commands to install applications onto the device.

CAUTION—PRODUCT DAMAGE: When connecting the device to a host computer and mounting the microSD card, follow the host computer's instructions for connecting and disconnecting USB devices to avoid damaging or corrupting files.

1. Ensure that the ADB drivers are installed on the host computer.
2. Connect the device to a host computer using a USB cable.
3. Go to **Settings**.
4. Touch **System** > **Developer Options**.
5. Touch the **USB debugging** toggle to enable it.

   The **Allow USB debugging?** message appears.

6. Touch **OK**.
7. On the host computer, navigate to the **platform-tools** folder and open a command prompt window.
8. Type `adb install <application>`

   where: <application> = the path and filename of the apk file.
9. Disconnect the device from the host computer.

Installing Applications Using Wireless ADB

Use ADB commands to install an application onto the device.

Go to zebra.com/support and download the appropriate file to a host computer.

NOTE: Note the following:

- Ensure that the latest adb files are installed on the host computer.
- The device and the host computer must be on the same wireless network.

1. Go to **Settings**.
2. Touch **System** > **Developer options**.

NOTE: If **Developer options** do not display, go to Enabling Developer Options.

3. Touch the **USB debugging** toggle to enable it.

   The **Allow USB debugging?** message appears.
4. Touch **OK**.
5. Touch the **Wireless debugging** toggle to enable it.

   a) If the device and host computer are connected for the first time, the **Allow wireless debugging on this network?** message displays with the **Always allow on this network** checkbox. Select the checkbox.

   b) Touch **ALLOW**.

   The **Developer options** screen displays again but with the **Wireless debugging** enabled.

6. Touch **Wireless debugging**.

   The **Wireless debugging** screen displays.

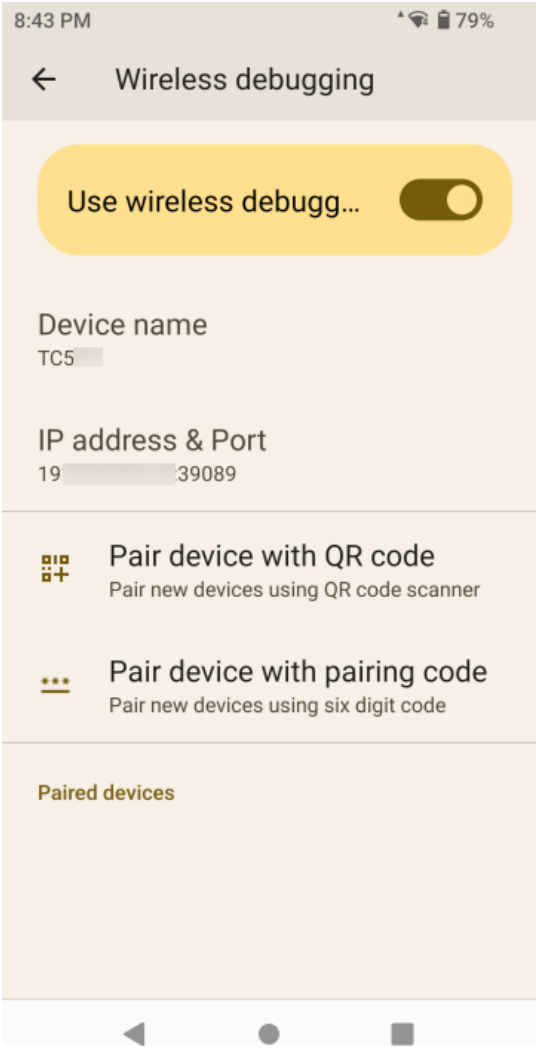

7. Note the IP address and Port on the **Wireless debugging** screen.

8. Touch **Pair device with pairing code**.

   The **Pair with device** dialog box displays.

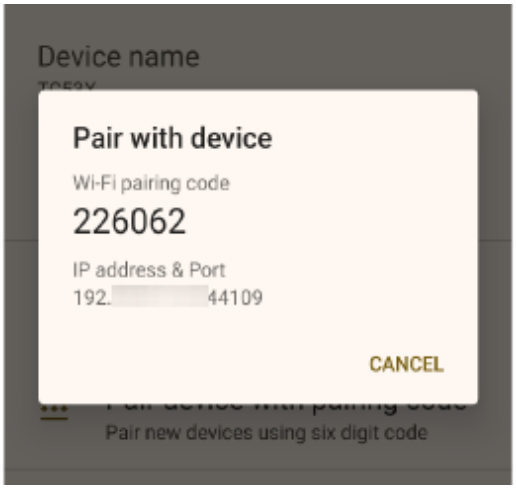

9. Note the Port on the **Pair with device** dialog box. It will be different than the one on the **Wireless debugging** screen. The IP address will be the same.
10. On the host computer, navigate to the **platform-tools** folder and open a command prompt window.
11. Type `adb pair XX.XX.XX.XX:XXXXX`

    where XX.XX.XX.XX:XXXXX is the IP address and port number from the **Pair with device** dialog box.
12. Press **Enter**.
13. Type the pairing code from the **Pair with device** dialog box.
14. Press **Enter**.
15. Type `adb connect XX.XX.XX.XX:XXXXX`

    where XX.XX.XX.XX:XXXXX is the IP address and port number from the **Wireless debugging** screen.
16. Press **Enter**.

    The device is now connected to the host computer.
17. Type `adb devices`.

    The following displays:

```
List of devices attached          XXXXXXXXXXXXXXX device
```

    Where XXXXXXXXXXXXXXX is the device number.

NOTE: If device number does not appear, ensure that ADB drivers are installed properly.

18. Press **Enter**.
19. Type `adb install <file>`.

    where <file> = the path and filename of the apk file.
20. Press **Enter**.
21. On the host computer, type: `adb disconnect`

22. Press **Enter**.

Installing Applications Using a microSD Card

Use a microSD card to install applications on your device.

NOTE: When connecting the device to a host computer and mounting the microSD card, follow the host computer's instructions for connecting and disconnecting USB devices to avoid damaging or corrupting files

Before use, it is strongly recommended that you format the microSD card on the device.

1. Copy the APK file to the root of the microSD card.
   - Copy the APK file to a microSD card using a host computer (go to USB Communication for more information), and then install the microSD card into the device (go to Replacing the microSD Card for more information).
   - Connect the device with a microSD card already installed to the host computer, and copy the .apk file to the microSD card. Disconnect the device from the host computer.
2. Connect the device to a host computer using USB.
3. Copy the application APK file from the host computer to the microSD card.
4. Remove the microSD card from the host computer.
5. Press and hold the Power button on the device until the menu appears.
6. Touch **Power off**.
7. Press the two battery latches in.
8. Lift the battery from the device.
9. Lift the access door.
10. Insert the microSD card.
11. Replace the access door.
12. Insert the battery, bottom first, into the battery compartment in the back of the device.
13. Press the battery down until the battery release latches snap into place.
14. Press and hold **Power** to turn on the device.
15. Swipe the screen up and select to view files on the microSD card.
16. Locate the application APK file.
17. Touch the application file.
18. Touch **Continue** to install the app or **Cancel** to stop the installation.
19. To confirm installation and accept what the application affects, touch **Install**. Otherwise, touch **Cancel**.
20. Touch **Open** to open the application or **Done** to exit the installation process.

    The application appears in the App list.

Uninstalling an Application

Free up device memory by removing unused apps.

1. Go to **Settings**.
2. Touch **Apps** > **See all ## apps**.
3. Touch the app that you want to uninstall.

   Some apps were pre-installed on the device, and you cannot uninstall them. However, you can disable them (turning the app off and hiding it from the device).
4. Touch **UNINSTALL**.
5. Touch **OK** to confirm.

Android System Update

System Update packages can contain either partial or complete updates for the operating system. Zebra distributes the System Update packages on the Zebra Support & Downloads website. Perform a system update using either a microSD card or using ADB.

Performing a System Update Using microSD Card

It is strongly recommended that, prior to use, you format the microSD card on the device.

Go to the Zebra Support & Downloads website at zebra.com/support and download the appropriate System Update package to a host computer.

1. Copy the System Update ZIP file to the root of the microSD card.
   - Copy the ZIP file to a microSD card using a host computer, and then install the microSD card into the device. See Getting Started for information on installing the microSD card.
   - Connect the device (with a microSD card already installed) to the host computer, copy the ZIP file to the microSD card, and then disconnect the device from the host computer.
2. Press and hold **Power** until the menu appears.
3. Touch **Restart**.
4. Press and hold **PTT** until the device vibrates.

   The System Recovery screen appears.
5. Press **Volume Up** and **Volume Down** to navigate to **Apply upgrade from SD card**.
6. Press **Power**.
7. Press **Volume Up** and **Volume Down** to navigate to the System Update file.
8. Press **Power**.

   The System Update installs, and then the device returns to the Recovery screen.
9. Press **Power** to reboot the device.

Performing a System Update Using ADB

Use ADB to perform a system update.

1. Connect the device to a host computer using a USB-C cable or by inserting the device into the 1-Slot USB/Ethernet Cradle.
2. Go to **Settings**.
3. Touch **System** > **Developer options**.
4. Slide the **USB debugging** switch to the **ON** position.
5. If the device and host computer are connected for the first time, the **Allow USB debugging?** dialog box with the **Always allow from this computer** check box displays. Select the check box, if required
6. Touch **OK**.
7. On the host computer, navigate to the **platform-tools** folder and open a command prompt window.
8. Type `adb devices`.

   If the device number does not display, ensure the ADB drivers are installed properly
9. Type `adb reboot recovery`.
10. Press **Enter**.

    The System Recovery screen displays on the device.
11. Press **Volume Up** and **Volume Down** to navigate to **Apply upgrade from ADB**
12. Press **Power**.
13. On the host computer command prompt window type `adb sideload <file>`.

    where: <file> = the path and filename of the zip file
14. Press **Enter**.

    The System Update installs (progress displays as a percentage in the Command Prompt window), and then the System Recovery screen displays on the device.
15. Press **Power** to reboot the device.

NOTE: If you cannot enter Android Recovery mode through the ADB command, go to Entering Android Recovery Manually.

Verifying System Update Installation

Verify that the system update was successful.

1. Go to **Settings**.
2. Touch **About phone**.
3. Scroll down to **Build number**.
4. Ensure that the build number matches the new system update package file number.

Android Enterprise Reset

An Enterprise Reset erases all user data in the /data partition, including data in the primary storage locations (/sdcard and emulated storage), while preserving the contents of the /enterprise folder and

its subfolders. The contents of the /enterprise folder and its subfolders are preserved. Zebra distributes the Enterprise Reset packages on the Zebra Support & Downloads website.

Before performing an Enterprise Reset, provision all necessary configuration files and restore after the reset.

Performing an Enterprise Reset Using microSD Card

It is strongly recommended that, prior to use, you format the microSD card on the device.

1. Copy the Enterprise Reset zip file to the root of the microSD card.
   - Copy the zip file to a microSD card using a host computer and then install the microSD card into the device. See Getting Started for more information.
   - Connect the device with a microSD card already installed to the host computer and copy zip file to the microSD card. See USB Communication for more information. Disconnect the device from the host computer.
2. Press and hold **Power** until the menu appears.
3. Touch **Restart**.
4. Press and hold **PTT** until the device vibrates.

   The System Recovery screen appears.
5. Press **Volume Up** and **Volume Down** to navigate to **Apply upgrade from SD card**.
6. Press **Power**.
7. Press **Volume Up** and **Volume Down** to navigate to the Enterprise Reset file.
8. Press **Power**.

   The Enterprise Reset occurs and then the device returns to the Recovery screen.
9. Press **Power** to reboot the device.

Performing an Enterprise Reset Using ADB

Perform an Enterprise Reset using ADB.

1. Connect the cable or cradle to the host computer.
2. Go to **Settings**.
3. Touch **System** > **Developer options**.
4. Slide the **USB debugging** switch to the **ON** position.
5. If the device and host computer are connected for the first time, the **Allow USB debugging?** dialog box with the **Always allow from this computer** check box displays. Select the check box, if required.
6. Touch **OK**.
7. On the host computer, navigate to the **platform-tools** folder and open a command prompt window.
8. Type `adb reboot recovery`.
9. Press **Enter**.

   The System Recovery screen appears on the device.
10. Press **Volume Up** and **Volume Down** to navigate to **Apply upgrade from ADB**.

11. Press **Power**.
12. On the host computer command prompt window type `adb sideload <file>`

    where: <file> = the path and filename of the zip file.
13. Press **Enter**.

    The Enterprise Reset package installs and then the System Recovery screen appears on the device.
14. Press **Power** to reboot the device.

NOTE: If you cannot enter Android Recovery mode through the ADB command, go to Entering Android Recovery Manually.

Android Factory Reset

A Factory Reset erases all data in the /data and /enterprise partitions in internal storage and clears all device settings. A Factory Reset returns the device to the last installed operating system image. To revert to a previous operating system version, re-install that operating system image. Zebra distributes the Factory Reset packages on the Zebra Support & Downloads website.

Performing a Factory Reset Using microSD Card

Perform a Factory Reset using a microSD card.

Go to the Zebra Support & Downloads website at zebra.com/support and download the appropriate Factory Reset file to a host computer.

1. Copy the Factory Reset zip file to the root of the microSD card.
   - Copy the zip file to a microSD card using a host computer and then installing the microSD card into the device. See Getting Started for more information.
   - Connect the device with a microSD card already installed to the host computer, copy zip file to the microSD card, and then disconnect the device from the host computer.
2. Press and hold **Power** until the menu appears.
3. Touch **Restart**.
4. Press and hold **PTT** until the device vibrates.

   The System Recovery screen appears.
5. Press **Volume Up** and **Volume Down** to navigate to **Apply upgrade from SD card**.
6. Press **Power**.
7. Use **Volume Up** and **Down Arrow** to navigate to the Factory Reset file.
8. Press **Power**.

   The Factory Reset occurs, and then the device returns to the Recovery screen.
9. Press **Power** to reboot the device.

Performing a Factory Reset Using ADB

Perform a Factory Reset using ADB.

Go to the Zebra Support & Downloads web site at zebra.com/support and download the appropriate Factory Reset file to a host computer.

1. Connect the device to a host computer using the Rugged Charge/USB cable or by inserting the device into the 1-Slot USB/Charge Only Cradle.
2. Go to **Settings**.
3. Touch **System** > **Developer options**.
4. Slide the **USB debugging** switch to the **ON** position.
5. If the device and host computer are connected for the first time, the **Allow USB debugging?** dialog box with the **Always allow from this computer** check box displays. Select the check box, if required.
6. Touch **OK**.
7. Type `adb reboot recovery`.
8. Press **Enter**.

   The System Recovery screen appears on the device.
9. Press **Volume Up** and **Volume Down** buttons to navigate to **Apply upgrade from ADB**.
10. Press **Power**.
11. On the host computer command prompt window type`adb sideload <file>`.

    where: <file> = the path and filename of the zip file.
12. Press **Enter**.

    The Factory Reset package installs, and then the System Recovery screen appears on the device.
13. Press **Power** to reboot the device.

Android Storage

The device contains multiple types of file storage.

- Random Access Memory (RAM)
- On-device Storage
- Internal storage
- External storage (microSD card)
- Enterprise folder

NOTE: It is recommended to install a microSD card on the device due to limited internal storage space.

Random Access Memory

Executing programs use RAM to store data. Data stored in RAM is lost upon a reset.

The operating system manages how applications use RAM. It only allows applications and component processes and services to use RAM when required. It may cache recently used processes in RAM, so they restart more quickly when opened again, but it will erase the cache if it needs the RAM for new activities.

The screen displays the amount of used and free RAM.

- **Performance** - Indicates memory performance.
- **Total memory** - Indicates the total amount of RAM available.
- **Average used (%)** - Indicates the average amount of memory (as a percentage) used during the period of time selected (default - 3 hours).
- **Free** - Indicates the total amount of unused RAM.
- **Memory used by apps** - Touch to view RAM usage by individual apps.

Viewing Memory

View the amount of memory used and free RAM.

1. Go to **Settings**.
2. Touch **System** > **Developer options**.
3. Touch **Memory**.

Internal Storage

The device has internal storage. The internal storage content can be viewed and files copied to and from when the device is connected to a host computer. Some applications are designed to be stored on the internal storage rather than in internal memory.

Viewing Internal Storage

View available and used internal storage on the device.

1. Go to **Settings**.
2. Touch **Storage**.

   It displays the total amount of space on internal storage and amount used.

If the device has removable storage installed, touch **Internal shared storage** to display the amount of internal storage used by apps, photos, videos, audio, and other files.

Enterprise Folder

The Enterprise folder (within internal flash) is a super-persistent storage that is persistent after a reset and an Enterprise Reset.

The Enterprise folder is erased during a Factory Reset. The Enterprise folder is used for deployment and device-unique data. The Enterprise folder is approximately 128 MB (formatted). Applications can persist data after an Enterprise Reset by saving data to the enterprise/user folder. The folder is ext4 formatted and is only accessible from a host computer using ADB or from an MDM.

External Storage

The device can have a removable microSD card. The microSD card content can be viewed and files copied to and from when the device is connected to a host computer. The device can have a removable USB drive. The USB drive content can be viewed and files copied to and from when the device is connected to a host computer.

Viewing External Storage

Portable storage displays the total amount of space on the installed microSD card or USB drive and the amount used.

1. Go to **Settings**.
2. Touch **Storage**.

   Touch **SD card** to view the contents of the card.
3. To unmount the microSD card, touch ⏏.

Formatting a microSD Card as Internal Memory

You can format a microSD card as internal memory to increase the actual amount of the device's internal memory. Once formatted, the microSD card can only be read by this device.

NOTE: The suggested maximum SD card size is 128 GB when using internal storage.

1. Touch **SD card**.
2. Touch ⋮ > **Storage settings**.
3. Touch **Format as internal**.
4. Touch **ERASE & FORMAT**.
5. Touch **DONE**.

Formatting a microSD Card as Portable Storage

Format a microSD card as portable storage for the device.

1. Touch **SD card**.
2. Touch ⋮ > **Storage settings**.
3. Touch **Format**.
4. Touch **ERASE & FORMAT**.
5. Touch **DONE**.

Managing Apps

Apps use two kinds of memory: storage memory and RAM. Apps use storage memory for themselves and any files, settings, and other data they use. They also use RAM when they are running.

1. Go to **Settings**.

2. Touch **Apps** > **All apps**.
3. Touch ⋮ > **Show system** to include system processes in the list.
4. Touch an app, process, or service in the list to open a screen with details about it and, depending on the item, to change its settings, permissions, notifications and to force stop or uninstall it.

App Details

Apps have different kinds of information and controls.

- **Force stop** - Stop an app.
- **Disable** - Disable an app.
- **Uninstall** - Remove the app and all of its data and settings from the device.
- **Notifications** - Set the app notification settings.
- **Permissions** - Lists the areas on the device that the app has access to.
- **Storage & cache** - Lists how much information is stored and includes buttons for clearing it.
- **Mobile data & Wi-Fi** - Provides information about data consumed by an app.
- **Mobile data & Wi-Fi** - Provides information about data consumed by an app. Mobile data not supported.
- **Advanced**
  - **Screen time** - Displays the amount of time the app has displayed on the screen.
  - **Battery** - Lists the amount of computing power used by the app.
  - **Open by default** - If you have configured an app to launch certain file types by default, you can clear that setting here.
  - **Display over other apps** - Allows an app to display on top of other apps.
  - **App details** - Provides a link to additional app details on the Play store.
  - **Additional settings in the app** - Opens settings in the app.
  - **Modify system settings** - Allows an app to modify the system settings.

Managing Downloads

Files and apps downloaded using the Browser or Email are stored on the USB drive or Internal storage in the Download directory. Use the Downloads app to view, open, or delete downloaded items. Files and apps downloaded using the Browser or Email are stored on the microSD card or Internal storage in the Download directory. Use the Downloads app to view, open, or delete downloaded items. Files and apps downloaded using the Browser or Email are stored in Internal storage in the Download directory. Use the Downloads app to view, open, or delete downloaded items.

1. Swipe the screen up and touch .
2. Touch ≡ > **Downloads**.
3. Touch and hold an item to delete, and then touch .

   The item is deleted from the device.

Maintenance and Troubleshooting

This section includes instructions on cleaning and storing the device, and provides troubleshooting solutions for potential problems during operation.

Maintaining the Device

For trouble-free service, observe the following tips when using the device.

- To avoid scratching the screen, use the supplied stylus or plastic-tipped pens intended for use with a touch-sensitive screen. Never use an actual pen, pencil, or other sharp object on the surface of the device screen.
- The touch-sensitive screen of the device is glass. Do not drop the device or subject it to strong impact.
- Protect the device from temperature extremes. Do not leave it on the dashboard of a car on a hot day, and keep it away from heat sources.
- Do not store the device in any dusty, damp, or wet location.
- Use a soft lens cloth to clean the device. If the surface of the device screen becomes soiled, clean it with a soft cloth moistened with an approved cleanser. For a list of approved cleansers, go to Approved Cleaning and Disinfectant Agents.
- Periodically replace the rechargeable battery to ensure maximum battery life and product performance. Battery life depends on individual usage patterns.

Display Best Practices

When a static image displays for extended periods of time, you may see a faint remnant of that image even after a new image displays. This is called image retention.

To prevent image retention:

- Set the display to turn off after a few minutes of idle time.
- Rotate background images periodically.
- Turn off the display when the device is not in use.
- While the static image is active, use a screen saver with one or more of the following characteristics:
  - The background color is set to black.
  - A small moving image (approximately 2% of the display size).
  - The image moves randomly across the screen.

Best Practices for Enterprise Mobile Devices Operating in Hot Environments and Direct Sunlight

Exceeding the operating temperature by external hot environments will cause the device's thermal sensor to notify the user of a shutdown of the WAN modem or shutdown the device until the device's temperature returns to the operational temperature range.

- Avoid direct sunlight to the device - The easiest way to prevent overheating is to keep the device out of direct sunlight. The device absorbs light and heat from the sun and retains it, getting hotter the longer it remains in sunlight and heat.
- Avoid leaving the device in a vehicle on a hot day or hot surface - Similar to leaving the device out in direct sunlight, the device will also absorb the thermal energy from a hot surface or when left on the dashboard of a vehicle or seat, getting warmer the longer it remains on the hot surface or inside the hot vehicle.
- Turn off unused apps on the device. Open, unused apps running in the background can cause the device to work harder, which in turn may cause it to heat up. This will also improve your mobile computer device's battery life performance.
- Avoid turning your screen brightness up - Just the same as running background apps, turning your brightness up will force your battery to work harder and create more heat. Minimizing your screen brightness may extend operating the mobile computer device in hot environments.

Properly Plugging and Unplugging a USB-C Cable

This section outlines the proper procedures for safely connecting and disconnecting a USB Type-C cable to prevent damage to the device's connector port.

When connecting/disconnecting the cable from your device:

- Visually inspect the input connector for damage, foreign materials, or signs of moisture.
- Avoid inserting or removing the cable in a non-horizontal direction (for example, upward, downward, left, right, or forward direction). Keep it straight.

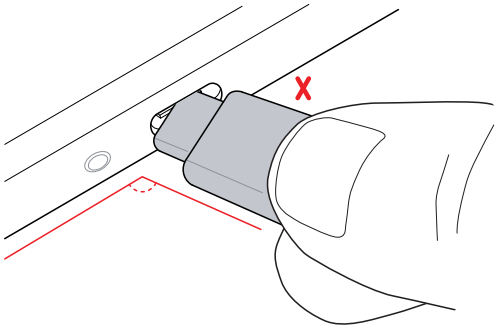

- Avoid inserting or removing the cable in a forceful manner.
- Avoid wiggling the cable when plugged into the port.
- Avoid pulling or tugging the cable when plugged into the port.

Connecting a USB-C Cable

It is important to correctly align the cable in a straight line when inserting it into the device to prevent damage to the connector or cable.

Examine the device's USB-C port and USB-C connector for damage. If either is damaged, stop using it and get it serviced or repaired.

1. Using your index finger and thumb, hold both sides of the USB-C cable.
2. Insert the cable straight into the port and not at an angle.

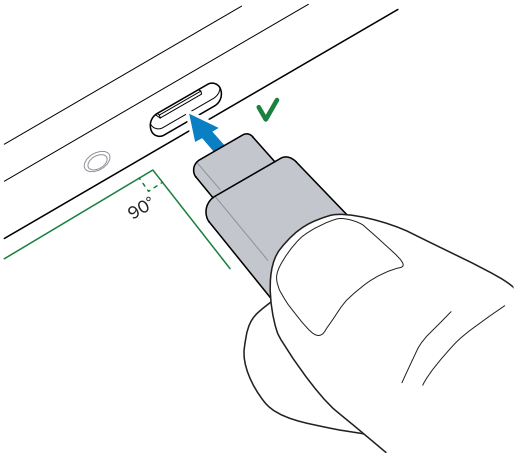

Disconnecting a USB-C Cable

It is important to correctly align the cable in a straight line when removing it from the device to prevent damage to the connector or cable.

Examine the device's USB-C port and USB-C connector for damage. If either is damaged, stop using it and get it serviced or repaired.

1. Using your index finger and thumb, hold both sides of the USB-C cable where it is connected to the device.
2. Gently pull it straight out and not at an angle.

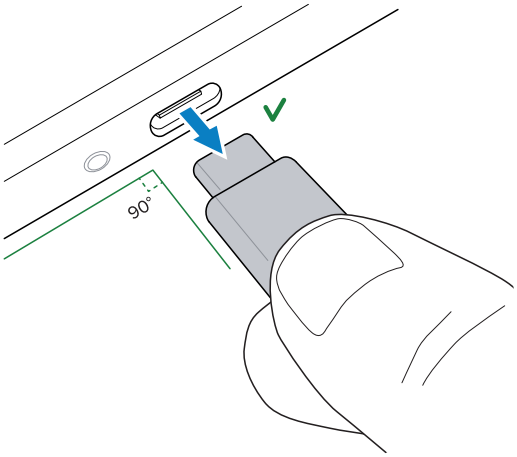

Battery Safety Guidelines

To use the device safely, you must follow the battery guidelines.

- The area in which the units are charged should be clear of debris and combustible materials or chemicals. Particular care should be taken when the device is charged in a non-commercial environment.
- Follow the battery usage, storage, and charging guidelines found in this guide.
- Improper battery use may result in a fire, explosion, or other hazard.
- To charge the mobile device battery, the ambient battery and charger temperatures must be between 0°C to 50°C (32°F to 122°F).
- Do not use incompatible batteries and chargers, including non-Zebra batteries and chargers. Use of an incompatible battery or charger may present a risk of fire, explosion, leakage, or other hazard. If you have any questions about the compatibility of a battery or a charger, contact the Global Customer Support Center.
- For devices that utilize a USB port as a charging source, the device shall only be connected to products that bear the USB-IF logo or have completed the USB-IF compliance program.
- Do not disassemble, open, crush, bend, deform, puncture, or shred the battery.
- Severe impact from dropping any battery-operated device on a hard surface could cause the battery to overheat.
- Do not short-circuit a battery or allow metallic or conductive objects to contact the battery terminals.
- Do not modify or remanufacture, attempt to insert foreign objects into the battery, immerse or expose to water or other liquids, or expose to fire, explosion, or other hazard.
- Do not leave or store the equipment in or near areas that might get very hot, such as in a parked vehicle or near a radiator or other heat source. Do not place a battery into a microwave oven or dryer.
- Battery usage by children should be supervised.
- Please follow local regulations to properly dispose of used rechargeable batteries.
- Do not dispose of batteries in a fire.
- Seek medical advice immediately if a battery has been swallowed.
- In the event of a battery leak, do not allow the liquid to come in contact with the skin or eyes. If contact has been made, wash the affected area with water for 15 minutes, and seek medical advice.
- If you suspect damage to your equipment or battery, contact Customer Support to arrange for inspection.

Cleaning Instructions

This section provides instructions for cleaning the device.

Use caution and avoid damaging the device when using cleaning materials.

CAUTION: Always wear eye protection. Read the warning label on alcohol product before using. If you have to use any other solution for medical reasons please contact the Global Customer Support Center for more information.

WARNING: Avoid exposing this product to contact with hot oil or other flammable liquids. If such exposure occurs, unplug the device and clean the product immediately in accordance with these guidelines.

Approved Cleaning and Disinfectant Agents

This section lists the approved cleaning and disinfectant agents.

Use pre-moistened wipes, and do not allow the liquid cleaner to pool. 100% of the active ingredients in any cleaner must consist of one or some combination of the following:

- Isopropyl alcohol
- Bleach/sodium hypochlorite (see the following important note)
- Hydrogen peroxide
- Ammonium chloride
- Mild dish soap

IMPORTANT:

When using sodium hypochlorite (bleach) based products, always follow the manufacturer's recommended instructions: Use gloves during application and remove the residue afterward with a damp alcohol cloth or a cotton swab to avoid prolonged skin contact while handling the device. Because of the powerful oxidizing nature of sodium hypochlorite, the metal surfaces on the device are prone to oxidation (corrosion) when exposed to this chemical in liquid form (including wipes).

If these types of disinfectants come in contact with metal on the device, prompt removal with an alcohol-dampened cloth or cotton swab after the cleaning step is critical.

Cleaning and Disinfecting Guidelines

- Turn off and/or disconnect the device from AC/DC power.
- To avoid damage to the device or accessory, use only approved cleaning and disinfecting agents specified for the device.
- Follow the manufacturer's directions on the approved cleaning and disinfecting agent for using their product properly and safely.
- Use pre-moistened wipes or dampen a soft sterile cloth (not wet) with the approved agent. Never spray or pour chemical agents directly onto the device.
- Use a moistened cotton-tipped applicator to reach tight or inaccessible areas. Be sure to remove any lint left over by the applicator.
- Do not allow liquid to pool.
- Allow the device to air dry before use, or dry with a soft lint-free cloth or towelette. Ensure electrical contacts are fully dry before reapplying power.

Cleaning Materials Required

- Alcohol wipes with 70% isopropyl alcohol
- Lens tissue

- Cotton-tipped applicators
- 70% Isopropyl alcohol
- Can of compressed air for electronics with a dispenser tube

Cleaning Frequency

The cleaning frequency is at the customer's discretion due to the varied environments in which the mobile devices are used and may be cleaned as frequently as required. When dirt is visible, it is recommended to clean the mobile device to avoid the build-up of particles, which makes the device more difficult to clean later on.

For consistency and optimum image capture, it is recommended to clean the camera window periodically especially when used in environments prone to dirt or dust.

Special Cleaning Notes

The device should not be handled while wearing vinyl gloves containing phthalates or before hands are washed to remove contaminant residue after gloves are removed.

If products containing any harmful ingredients, such as hand sanitizer that contains ethanolamine, are used before handling the device, completely dry your hands before handling the device to prevent damage.

IMPORTANT: If the battery connectors are exposed to cleaning agents, thoroughly wipe off as much of the chemical as possible and clean with an alcohol wipe. It is also recommended to install the battery in the terminal before cleaning and disinfecting the device to help minimize buildup on the connectors.

When using cleaning/disinfectant agents on the device, it is important to follow the directions prescribed by the cleaning/disinfectant agent manufacturer.

Cleaning the Device

This section describes how to clean the housing and battery of the device.

For more information on cleaning the device connector, refer to Cleaning the Connectors.

Housing

Thoroughly wipe the housing, including all buttons and triggers, using an approved alcohol wipe.

Display

The display can be wiped down with an approved alcohol wipe, but care should be taken not to allow any pooling of liquid around the edges of the display. Immediately dry the display with a soft, non-abrasive cloth to prevent streaking.

Battery Guide Slots

Insert a cotton-tipped applicator dipped in alcohol into the battery guide rails to clean out debris and then dry with a dry cotton-tipped applicator.

Camera and Exit Window

Wipe the camera and exit the window periodically with lens tissue or other material suitable for cleaning optical material such as eyeglasses.

Cleaning the Battery Connector

To clean the battery connectors:

1. Remove the main battery from the mobile computer. Go to Replacing the Battery for proper steps on how to remove the battery.

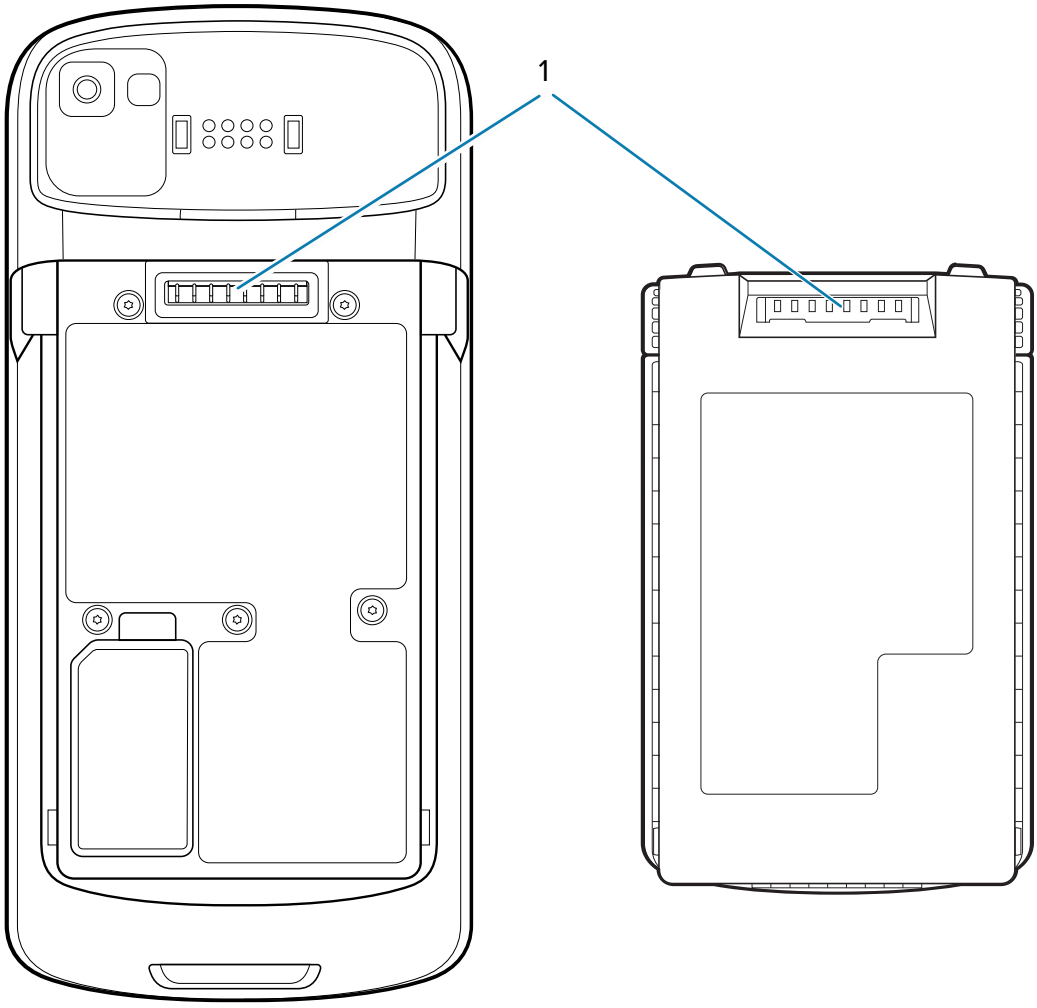

The battery connectors (1) are revealed.

2. Dip the cotton portion of the cotton-tipped applicator in isopropyl alcohol.

3. To remove any grease or dirt, rub the cotton portion of the cotton-tipped applicator back and forth across the connectors on the battery and terminal sides. Do not leave any cotton residue on the connectors.
4. Repeat at least three times.
5. Use a dry cotton-tipped applicator and repeat steps 3 and 4. Do not leave any cotton residue on the connectors.
6. Inspect the area for grease or dirt and repeat the cleaning process if necessary.

CAUTION: After cleaning the battery connectors with bleach-based chemicals, follow the above instructions to remove bleach from the connectors.

Cleaning Cradle Connectors

1. Remove the DC power cable from the cradle.
2. Dip the cotton portion of the cotton-tipped applicator in isopropyl alcohol.
3. Rub the cotton portion of the cotton-tipped applicator along the pins of the connector. Slowly move the applicator back and forth from one side of the connector to the other. Do not leave any cotton residue on the connector.
4. All sides of the connector should also be rubbed with the cotton-tipped applicator.
5. Remove any lint left by the cotton-tipped applicator.
6. If grease and other dirt can be found on other areas of the cradle, use a lint-free cloth and alcohol to remove.
7. Allow at least 10 to 30 minutes (depending on ambient temperature and humidity) for the alcohol to air dry before applying power to cradle.

   If the temperature is low and humidity is high, longer drying time is required. Warm temperature and low humidity requires less drying time.

CAUTION: After cleaning the cradle connectors with bleach-based chemicals, follow the Cleaning Cradle Connectors instructions to remove bleach from the connectors.

Troubleshooting

This section provides information for resetting and troubleshooting the device and accessories.

Resetting the Device

There are two reset functions: soft reset and hard reset.

Performing a Soft Reset

Perform a soft reset if applications stop responding.

1. Press and hold Power until the menu appears.
2. Touch **Restart**.

   The device reboots.

Performing a Hard Reset

Perform a hard reset if the device stops responding.

CAUTION: Performing a hard reset with a microSD card installed in the device may cause damage or data corruption to the microSD card.

1. Simultaneously press the Power, left scan, and Volume Up buttons for at least 4 seconds.
2. When the screen turns off, release the buttons.

   The device reboots.

Device Troubleshooting

Solutions to common device issues.

Table 28 Troubleshooting the Device

Problem	Cause	Solution
After installing the battery, the device does not boot up.	The Power button was not pressed.	Press the Power button.
When pressing the power button the device does not turn on.	The battery is not charged.	Charge or replace the battery in the device.
	The battery is not installed properly.	Install the battery properly.
	System crash.	Perform a hard reset.
When pressing the power button the device does not turn on, but two LEDs blink.	Battery charge is at a level where data is maintained, but the battery should be recharged.	Charge or replace the battery in the device.
The battery did not charge.	Battery failed.	Replace battery. If the device still does not operate, perform a reset.
	The device was removed from the cradle while the battery was charging.	Insert the device in the cradle. Go to Charging the Device in a Cradle.
	Extreme battery temperature.	The battery does not charge if the ambient temperature is below 5°C (41°F) or above 40°C (104°F).
Cannot see characters on display.	The device is not powered on.	Press the Power button.
During data communication with a host computer, no data transmitted, or transmitted data was incomplete.	The device was removed from the cradle or disconnected from the host computer during communication.	Replace the device in the cradle, or reattach the communication cable and re-transmit.
	Incorrect cable configuration.	See the system administrator.
	Communication software was incorrectly installed or configured.	Perform setup.

Table 28 Troubleshooting the Device (Continued)

Problem	Cause	Solution
During data communication over Wi-Fi, no data was transmitted, or transmitted data was incomplete.	The Wi-Fi radio is not on.	Turn on the Wi-Fi radio.
	You moved out of range of an access point.	Move closer to an access point.
During data communication over Bluetooth, no data transmitted, or transmitted data was incomplete.	The Bluetooth radio is not on.	Turn on the Bluetooth radio.
	You moved out of range of another Bluetooth device.	Move within 10 m (32.8 ft) of the other device.
During data communication over WAN, no data transmitted, or transmitted data was incomplete.	You are in an area of poor cellular service.	Move into an area that has better service.
	APN is not set up correctly.	See the system administrator for APN setup information.
	SIM card not installed properly.	Remove and re-install the SIM card.
	The data plan is not activated.	Contact your service provider and ensure that your data plan is enabled.
No sound.	The volume setting is low or turned off.	Adjust the volume.
The device shuts off.	The device is inactive.	The display turns off after a period of inactivity. Set this period to 15 seconds, 30 seconds, 1, 2, 5, 10 or 30 minutes.
	The battery is depleted.	Replace the battery.
Tapping the window buttons or icons does not activate the corresponding feature.	The device is not responding.	Reboot the device.
A message displays stating that the device's memory is full.	Too many files are stored on the device.	Delete unused memos and records. Save these records on the host computer (or use an SD card for additional memory).
	Too many applications are installed on the device.	Remove user-installed applications on the device to recover memory. Select **Settings** > **Apps**. Select the app in the list and select **UNINSTALL**.
The device does not decode with a reading barcode.	The scanning application is not loaded.	Load a scanning application on the device or enable the DataWedge app. See the system administrator.
	Unreadable barcode.	Ensure the symbol is not defaced.
	The distance between the exit window and barcode is incorrect.	Place the device within the proper scanning range.

Table 28 Troubleshooting the Device (Continued)

Problem	Cause	Solution
	The device is not programmed for the barcode.	Program the device to accept the type of barcode being scanned. Refer to the EMDK or DataWedge application.
	The device is not programmed to generate a beep.	If the device does not beep on a good decode, set the application to generate a beep on a good decode.
	The battery is low.	If the scanner stops emitting a laser beam upon a trigger press, check the battery level. The scanner shuts off when the battery is low before the device's low battery condition notification. Contact the distributor or the Global Customer Support Center if the scanner is still not reading symbols.
The device cannot find any Bluetooth devices nearby.	Too far from other Bluetooth devices.	Move closer to the other Bluetooth device(s) within a range of 10 m (32.8 ft).
	The Bluetooth device(s) nearby are not turned on.	Turn on the Bluetooth device(s) to find.
	The Bluetooth device(s) are not in discoverable mode.	Set the Bluetooth device(s) to discoverable mode. If needed, refer to the device’s user documentation for help.
Cannot unlock the device.	The user entered an incorrect password.	If the user enters an incorrect password five times, the user is requested to wait for 30 seconds when using a PIN, Pattern, or Password.

2-Slot Charge Only Cradle Troubleshooting

The following table provides troubleshooting options for the cradle.

Table 29 Troubleshooting the 2-Slot Charge Only Cradle

Problem	Cause	Solution
LEDs do not light when device is inserted.	Cradle is not receiving power.	Ensure the power cable is connected securely to both the cradle and to AC power.
	Device is not seated firmly in the cradle.	Remove and re-insert the device into the cradle, ensuring it is firmly seated.

Table 29 Troubleshooting the 2-Slot Charge Only Cradle (Continued)

Problem	Cause	Solution
Device battery is not charging.	Device was removed from cradle or cradle was unplugged from AC power too soon.	Ensure cradle is receiving power. Ensure device is seated correctly. Confirm main battery is charging. The battery charges from fully depleted to 90% in less than 2 hours.
	Battery is faulty.	Verify that other batteries charge properly. If so, replace the faulty battery.
	The device is not fully seated in the cradle.	Remove and re-insert the device into the cradle, ensuring it is firmly seated.
	Extreme battery temperature.	Battery does not charge if ambient temperature is below 0°C (32°F) or above 50°C (122°F).

5-Slot Ethernet Cradle Troubleshooting

The following table provides troubleshooting options for the cradle.

Table 30 Troubleshooting the 5-Slot Ethernet Cradle

Problem	Cause	Solution
During communication, no data transmits, or transmitted data was incomplete.	Device removed from cradle during communications.	Replace device in cradle and retransmit.
	Incorrect cable configuration.	Ensure that the correct cable configuration.
	Device has no active connection.	An icon is visible in the status bar if a connection is currently active.
Battery is not charging.	Device removed from the cradle too soon.	Replace the device in the cradle. The battery charges from fully depleted to 90% in less than 2 hours.
	Battery is faulty.	Verify that other batteries charge properly. If so, replace the faulty battery.
	Device is not inserted correctly in the cradle.	Remove the device and reinsert it correctly. Verify charging is active. Touch **Settings** > **Battery** to view battery status.
	Ambient temperature of the cradle is too warm.	Move the cradle to an area where the ambient temperature is between 0°C (+32°F) and +50°C (+122°F).

5-Slot Charge Only Cradle Troubleshooting

The following table provides troubleshooting options for the cradle.

Table 31 Troubleshooting the 5-Slot Charge Only Cradle

Problem	Cause	Solution
Battery is not charging.	Device removed from the cradle too soon.	Replace the device in the cradle. The battery charges from fully depleted to 90% in less than 2 hours.
	Battery is faulty.	Verify that other batteries charge properly. If so, replace the faulty battery.
	Device is not inserted correctly in the cradle.	Remove the device and reinsert it correctly. Verify charging is active. Touch **Settings** > **Battery** to view battery status.
	Ambient temperature of the cradle is too warm.	Move the cradle to an area where the ambient temperature is between 5°C (+41°F) and +40°C (+104°F).

4-Slot Battery Charger Troubleshooting

The following table provides troubleshooting options for the charger.

Table 32 Troubleshooting the 4-Slot Battery Charger

Problem	Cause	Solution
Spare Battery Charging LED does not light when spare battery is inserted.	Spare battery is not correctly seated.	Remove and re-insert the spare battery into the charging slot, ensuring it is correctly seated.
Spare Battery not charging.	Charger is not receiving power.	Ensure the power cable is connected securely to both the charger and to AC power.
	Spare battery is not correctly seated.	Remove and re-insert the battery into the battery adapter, ensuring it is correctly seated.
	Battery adapter is not seated properly.	Remove and re-insert the battery adapter into the charger, ensuring it is correctly seated.
	Battery was removed from the charger or charger was unplugged from AC power too soon.	Ensure charger is receiving power. Ensure the spare battery is seated correctly. The battery charges from fully depleted to 90% in less than 2 hours.
	Battery is faulty.	Verify that other batteries charge properly. If so, replace the faulty battery.

Table 32 Troubleshooting the 4-Slot Battery Charger (Continued)

Problem	Cause	Solution
	Ambient temperature of the cradle is too warm.	Move the cradle to an area where the ambient temperature is between 0°C (+32°F) and +50°C (+122°F).

Technical Specifications

For device technical specifications, go to zebra.com/us/en/products/mobile-computers/handheld/tc5x-series.

SE4720 Decode Distances

The following table lists the decode distances for the SE4720 scan engine.

Symbol Density/ Bar Code Type	Typical Working Ranges	
	Near	Far
3 mil Code 39	7.6 cm (3.0 in.)	14.7 cm (5.8 in.)
5 mil Code 128	5.8 cm (2.3 in.)	24.9 cm (9.8 in.)
5 mil PDF417	7.6 cm (3.0 in.)	20.1 cm (7.9 in.)
6.67 mil PDF417	6.4 cm (2.5 in.)	25.7 cm (10.1 in.)
10 mil Data Matrix	5.3 cm (2.1 in.)	27.9 cm (11.0 in.)
100% UPCA	4.1 cm* (1.6 in.)	63.2 cm (24.9 in.)
15 mil Code 128	6.1 cm* (2.4 in.)	70.6 cm (27.8 in.)
20 mil Code 39	4.1 cm (1.6 in.)	91.7 cm (36.1 in.)
*Limited by width of barcode in field of view. Photographic quality barcode at 18° tilt pitch angle under 30 fcd ambient illumination. Distances measured from the front edge of the scan engine chassis.		

SE4770 Decode Distances

The following table lists the typical distances for selected barcode densities. The minimum element width (or “symbol density”) is the width in mils of the narrowest element (bar or space) in the symbol

Symbol Density/ Bar Code Type	Typical Working Ranges	
	Near	Far
3 mil Code 39	3.0 in. (7.9 cm)	5.8 in. (14.7 cm)
5.0 mil Code 128	2.3 in. (8.89 cm)	9.8 in. (24.9 cm)
5 mil PDF417	3.0 in. (7.6 cm)	7.9 in. (20 cm)

Symbol Density/ Bar Code Type	Typical Working Ranges	
	Near	Far
6.67 mil PDF417	2.5 in. (6.35 cm)	10.1 in. (26 cm)
10 mil Data Matrix	2.1 in. (5.3 cm)	11.0 in. (28 cm)
100% UPCA	1.6 in. (4.0 cm)	24.9 in. (63.2 cm)
15 mil Code 128	2.4 in. (6.0 cm)	27.8 in. (70.6 cm)
20 mil Code 39	1.6 in. (4.0 cm)	36.1 in. (91.7 cm)
Photographic quality barcode at 18° tilt pitch angle under 30 fcd ambient illumination.		

SE55 Decode Distances

The following table lists the decode distances for the SE55 scan engine.

Symbol Density/ Bar Code Type	Typical Working Ranges	
	Near	Far
3 mil Code 39	6.9 cm (2.7 in.)	41.1 cm (16.2 in.)
5 mil Code 39	6.4 cm (2.5 in.)	67.6 cm (26.6 in.)
5 mil PDF417	7.1 cm (2.8 in.)	49.9 cm (19.6 in.)
6.67 mil PDF417	6.6 cm (2.6 in.)	65.0 cm (25.6 in.)
80% UPCA	5.0 cm* (2.0 in.)	141.0 cm (55.5 in.)
100% UPCA	6.4 cm* (2.5 in.)	180.0 cm (71.0 in.)
10 mil Data Matrix	5.6 cm* (2.2 in.)	68.8 cm (27.1 in.)
15 mil Code 128 (4 in. wide)	18.2 cm* (7.2 in.)	181.0 cm (72.0 in.)
20 mil Code 39	*	277.0 cm (109.0 in.)
55 mil Code 39	*	744.0 cm (293.0 in.)
100 mil Code 39	*	1407.0 cm (554.0 in.)
*Limited by width of barcode in field of view.		

1-Slot Charge Only Cradle Technical Specifications

This section provides technical specifications for the 2-slot Charge Only Cradle.

Table 33 2-Slot Charge Only Cradle Technical Specifications

Item	Description
Dimensions	Height: 9.9 cm (3.9 in.) Width: 19.6 cm (7.71 in.) Depth: 13.3 cm (5.24 in.)

Table 33 2-Slot Charge Only Cradle Technical Specifications (Continued)

Item	Description
Weight	816 g (28.7 oz.) Charge only configuration with shim 823 g (29.0 oz.) Ethernet configuration with shim
Input Voltage	12 VDC
Power Consumption	Up to 35 watts (1 device charging and communication and 1 battery charging at the same time)
Operating Temperature	0°C to 50°C (32°F to 122°F)
Storage Temperature	-40°C to 70°C (-40°F to 158°F)
Charging Temperature	0°C to 50°C (32°F to 122°F)
Humidity	5% to 95% non-condensing
Drop	76.2 cm (30.0 in.) drops to vinyl tiled concrete at room temperature.
Electrostatic Discharge (ESD)	+/- 15 kV air +/- 8 kV contact +/- 8 kV indirect discharge

4-Slot Battery Charger Technical Specifications

This section provides technical specifications for the 4-slot Battery Charger.

Table 34 4-Slot Battery Charger Technical Specifications

Item	Description
Dimensions	Height: 9.7 cm (3.82 in.) Width: 9.8 cm (3.86 in.) Depth: 13.3 cm (5.24 in.)
Weight	480 g (16.9 oz.)
Input Voltage	12 VDC
Power Consumption	up to 50 watts
Operating Temperature	0°C to 50°C (32°F to 122°F)
Storage Temperature	-40°C to 70°C (-40°F to 158°F)
Charging Temperature	5°C to 40°C (41°F to 104°F)
Humidity	5% to 95% non-condensing
Drop	76.2 cm (30.0 in.) drops to vinyl tiled concrete at room temperature.

Table 34 4-Slot Battery Charger Technical Specifications (Continued)

Item	Description
Electrostatic Discharge (ESD)	+/- 20 kV air +/- 10 kV contact +/- 10 kV indirect discharge

5-Slot Charge Only Cradle Technical Specifications

This section provides technical specifications for the 5-slot Charge Only Cradle.

Table 35 5-Slot Charge Only Cradle Technical Specifications

Item	Description
Dimensions	Height: 10.6 cm (4.17 in.) Width: 48.9 cm (19.25 in.) Depth: 13.3 cm (5.24 in.)
Weight	1,937 g (68 oz.)
Input Voltage	12 VDC
Power Consumption	Up to 100 watts (5 devices charging and communication at the same time)
Operating Temperature	0°C to 50°C (32°F to 122°F)
Storage Temperature	-40°C to 70°C (-40°F to 158°F)
Charging Temperature	0°C to 50°C (32°F to 122°F)
Humidity	5% to 95% non-condensing
Drop	76.2 cm (30.0 in.) drops to vinyl tiled concrete at room temperature.
Electrostatic Discharge (ESD)	+/- 15 kV air +/- 8 kV contact +/- 8 kV indirect discharge

5-Slot Ethernet Cradle Technical Specifications

This section provides technical specifications for the 5-slot Ethernet Cradle.

Table 36 5-Slot Ethernet Cradle Technical Specifications

Item	Description
Dimensions	Height: 10.6 cm (4.17 in.) Width: 48.9 cm (19.25 in.) Depth: 13.3 cm (5.24 in.)

Table 36 5-Slot Ethernet Cradle Technical Specifications (Continued)

Item	Description
Weight	2,010 g (71 oz.)
Input Voltage	12 VDC
Power Consumption	Up to 100 watts (5 devices charging and communication at the same time)
Operating Temperature	0°C to 50°C (32°F to 122°F)
Storage Temperature	-40°C to 70°C (-40°F to 158°F)
Charging Temperature	0°C to 50°C (32°F to 122°F)
Humidity	5% to 95% non-condensing
Drop	76.2 cm (30.0 in.) drops to vinyl tiled concrete at room temperature.
Electrostatic Discharge (ESD)	+/- 15 kV air +/- 8 kV contact +/- 8 kV indirect discharge

Connect Cradle Technical Specifications

This section provides technical specifications for the Connect Cradle.

Specification	Description
Weight	TC53/TC58: 686 g (24 oz.)
	TC52ax: 557 g (20 oz.)
Dimensions	Height 140 mm (5.5 in.) Width 109 mm (4 in.) Length 224 mm (8.8 in.)
Input Voltage	12 VDC
Power Consumption	up to 48 watts
Operating Temperature	0°C to 40°C (32°F to 104°F)
Storage Temperature	-40°C to 70°C (-40°F to 158°F)
Charging Temperature	0°C to 40°C (32°F to 104°F)
Humidity	5% to 95% non-condensing
Drop	76.2 cm (30.0 in.) drops to vinyl tiled concrete at room temperature.
Electrostatic Discharge (ESD)	+/- 20kV air +/- 10 kV contact +/- 10 kV indirect discharge

Trigger Handle Technical Specifications

This section provides technical specifications for the Trigger Handle.

Table 37 Trigger Handle Technical Specifications

Item	Description
Dimensions	Height: 17.2 cm (6.7 in.) Width: 13.3 cm (5.2 in.) Depth: 8.8 cm (3.4 in.)
Weight	127.6 g (4.5 oz.)
Input Voltage	12 VDC
Operating Temperature	-20°C to 50°C (-4°F to 122°F)
Storage Temperature	-40°C to 70°C (-40°F to 158°F)
Humidity	5% to 95% non-condensing
Drop	Trigger/TC5X device: 6 feet drop - 4 drops on 6 sides to concrete over -20°C to 50°C temperature range. Separation of terminal and trigger handle is acceptable during drop.
	Trigger only: 6 feet drop - 4 drops on 6 sides to concrete over -20°C to 50°C temperature range.
Electrostatic Discharge (ESD)	+/- 15 kV air +/- 8 kV contact

Charge/USB Cable Technical Specifications

This section provides technical specifications for the Charge/USB Cable.

Table 38 Charge/USB Cable Technical Specifications

Item	Description
Length	164 +/- 6 cm (64.6 +/- 2.4 in.)
Input Voltage	5.0 VDC
Operating Temperature	-20°C to 50°C (-4°F to 122°F)
Storage Temperature	-40°C to 70°C (-40°F to 158°F)
Humidity	10% to 95% non-condensing
Drop	76.2 cm (30.0 in.) drops to vinyl tiled concrete at room temperature.
Electrostatic Discharge (ESD)	+/- 15 kV air +/- 8 kV contact