Acconet Indoor Cabinet

Features

- Welded frame, single section, compatible with 19" standard equipment’s.
- 5mm tempered glass front door with over 180 turning degree;
- Removable side panel, easy to install and lock optional;
- Cable entry on the top and bottom;
- L-shaped mounting profile, easy to adjustable on the mounting rail;
- Fan cut-out on the top, easy to install fan;
- Installing back panel, easy to fix on the wall;
- Various accessories for option;

Standard	ANS/EIA RS-310-D, IEC297-2, DIN41491, PART1, DIN41491, PART7, ETSI Standard
Material	SPCC quality cold rolled steel thickness: 1.2mm Tempered glass Thickness:5mm
Loading Capacity	Static loading: 60kg
Degree of protection	IP20
Surface finish	Degreasing, Pickling, Phosphating, Powder Coated
Product specification	4U-12U
Width	600mm
Depth	450mm

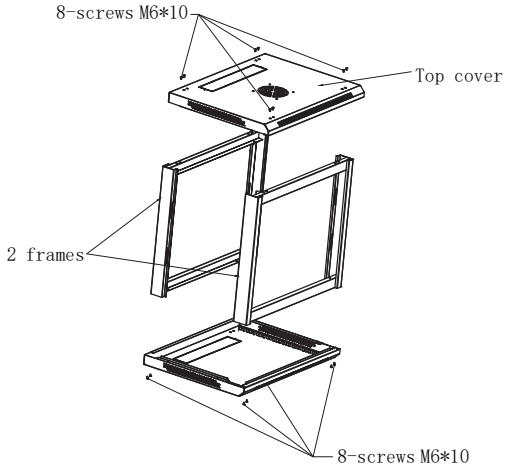
8-screws M6*10
Top cover
2 frames
8-screws M6*10

①

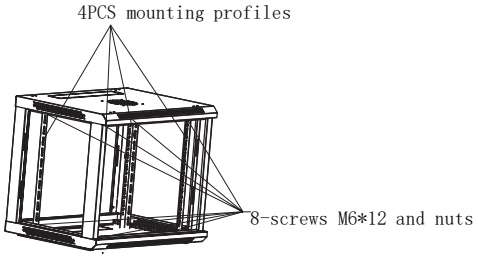
4PCS mounting profiles
8-screws M6*12 and nuts

②

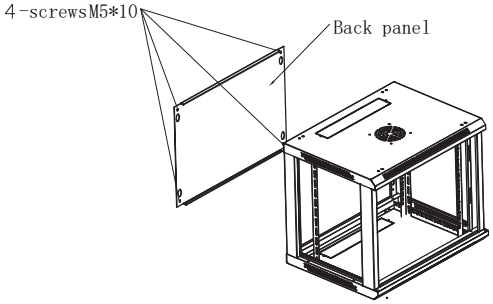
4-screws M5*10
Back panel

③

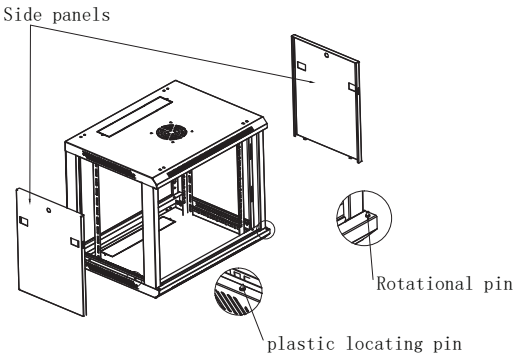
Side panels
Rotational pin
plastic locating pin

④

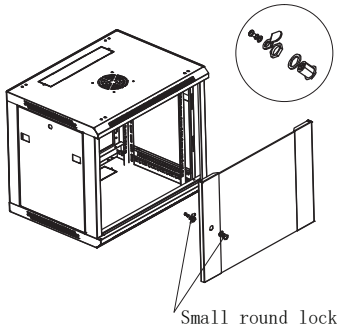
Small round lock

⑤

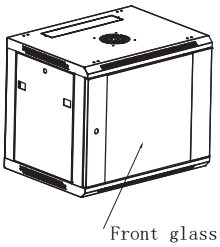
Front glass door

⑥